CMOS Inverter design using 180nm technology in Cadence Virtuoso

CMOS INVERTER CIRCUIT

OPERATION PRINCIPLE:

1. The CMOS inverter's operation depends on the input voltage applied to the gates of the PMOS and NMOS transistors.

2. Low input voltage turns ON the PMOS and OFF the NMOS, producing a high output; high input voltage turns OFF the PMOS and ON the NMOS, producing a low output.

3. This complementary switching ensures an inverted output with reliable operation and minimal power consumption.

VOLTAGE TRANSFER CHARACTERISTICS:

1. The Voltage Transfer Characteristic (VTC) describes the relationship between the input voltage and output voltage of a CMOS inverter.

2. As the input voltage increases from 0 to VDD, the output voltage switches sharply from VDD to 0.

3. The steep slope in the transition region indicates high voltage gain, and the midpoint of this region defines the switching threshold voltage of the inverteR

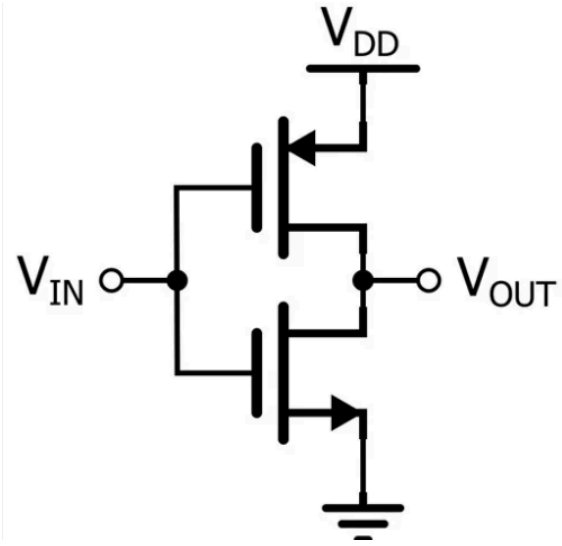

CADENCE SIMULATIONS

TERMINAL COMMANDS

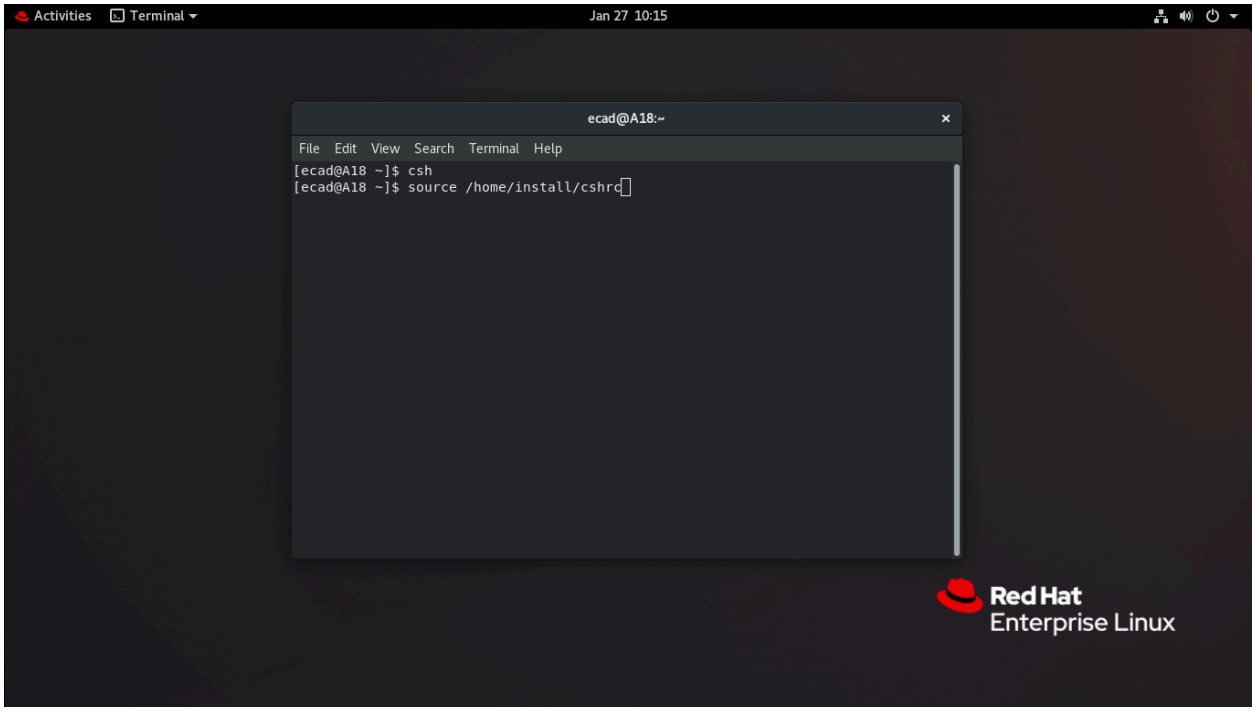

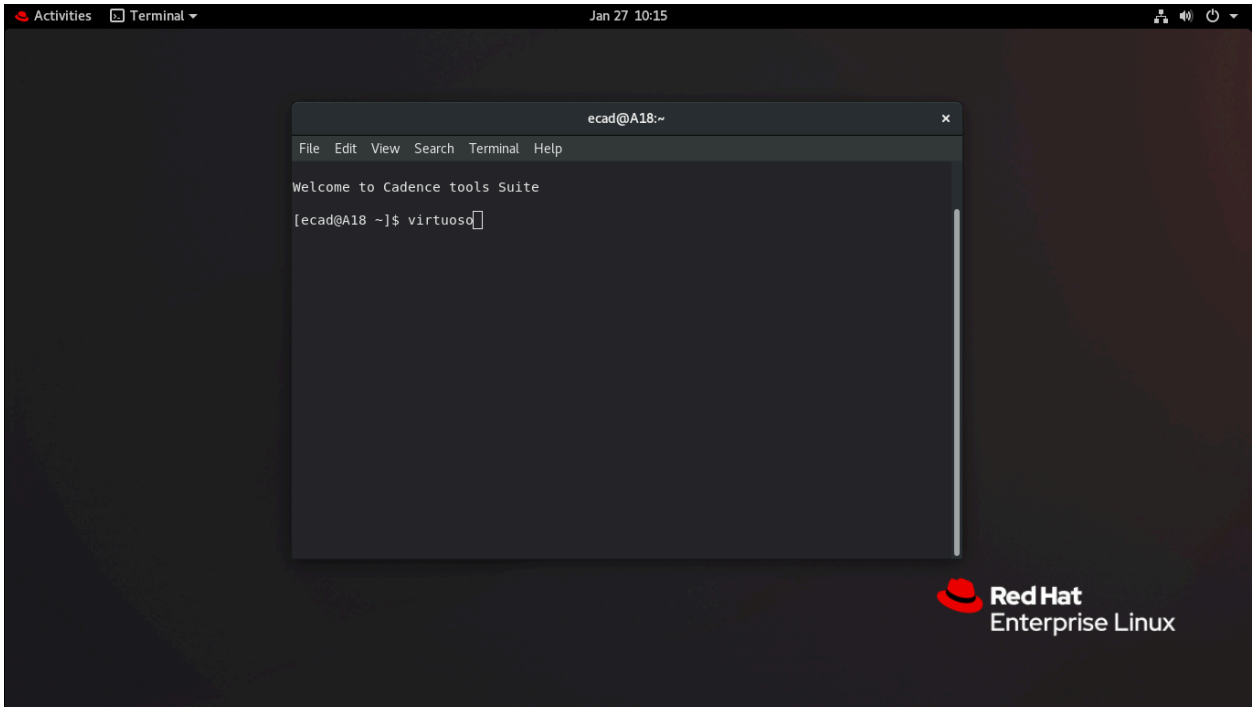

FILE > NEW > LIBRARY> ADD TO EXISTING

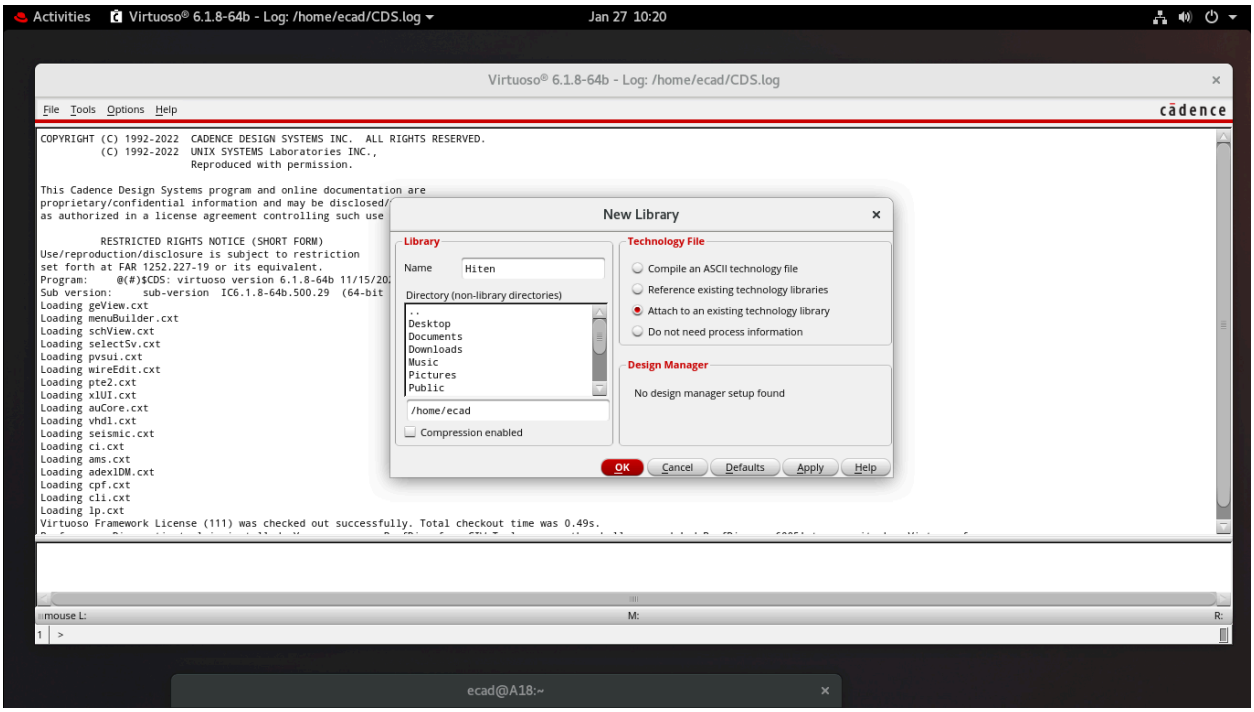

SELECT GDPK180 LIBRARY

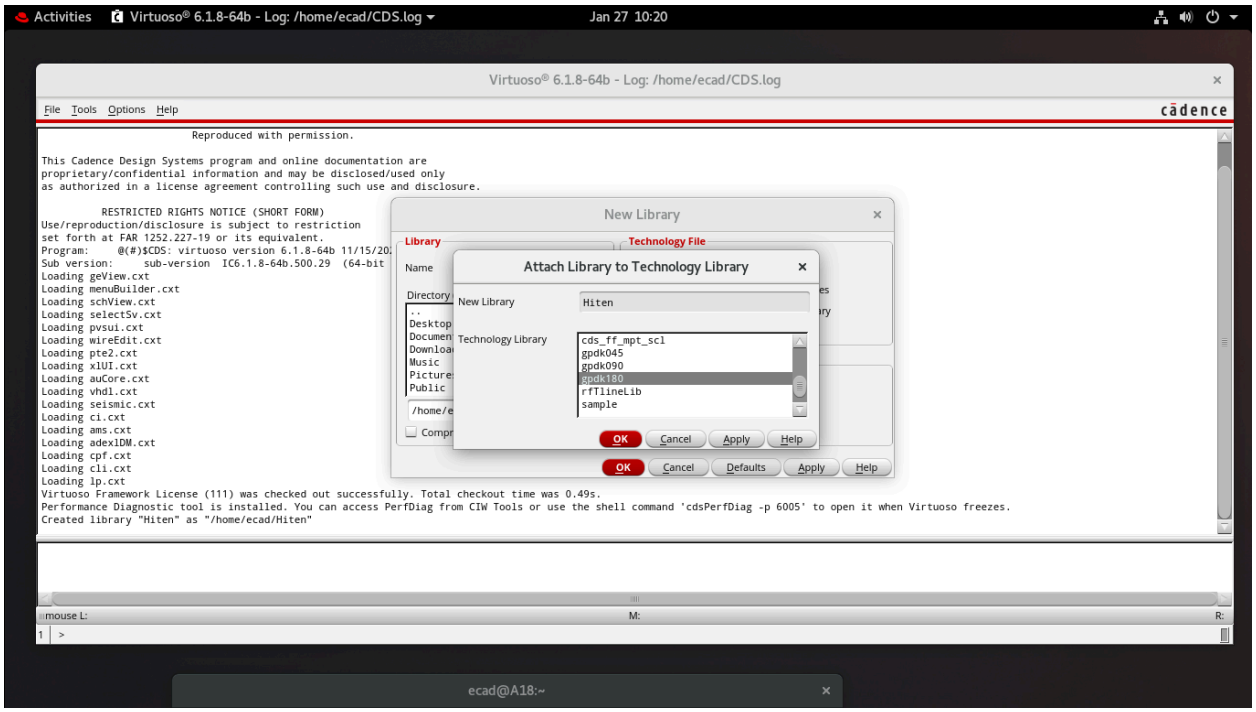

NEW > CELL VIEW > CMOS INVERTER
CREATE INSTANCE

Libraries used - gdpk180, analoglib

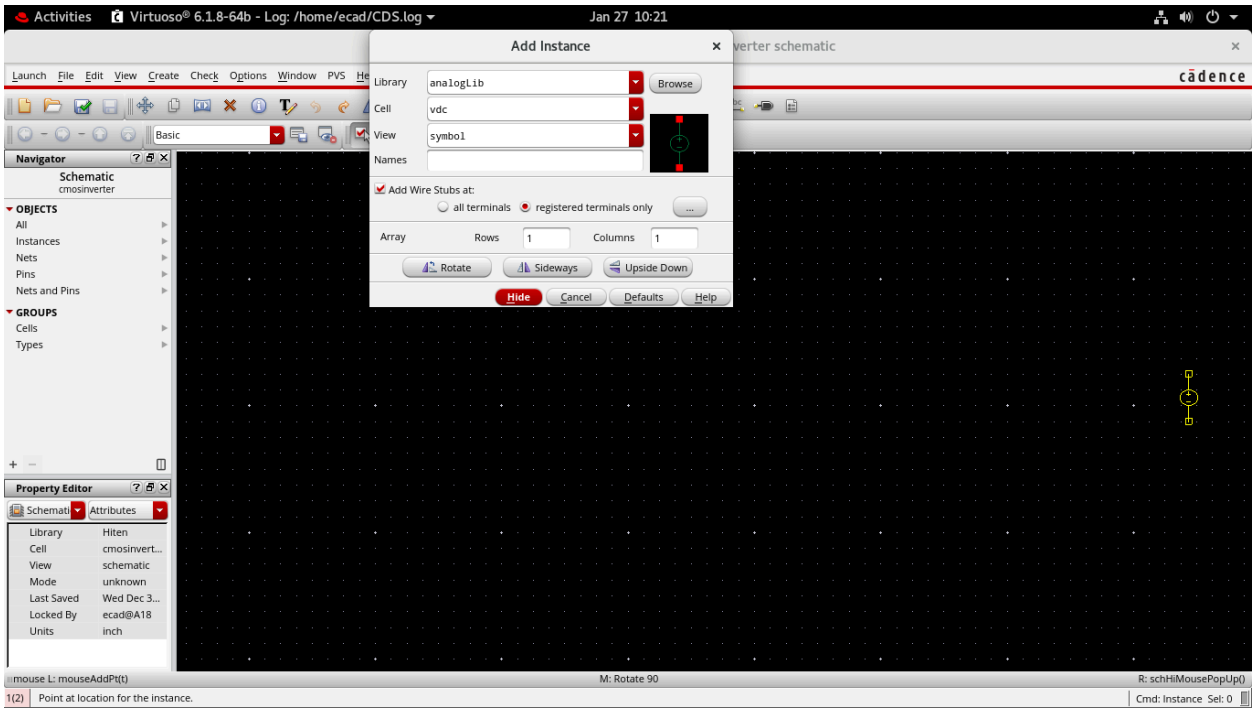

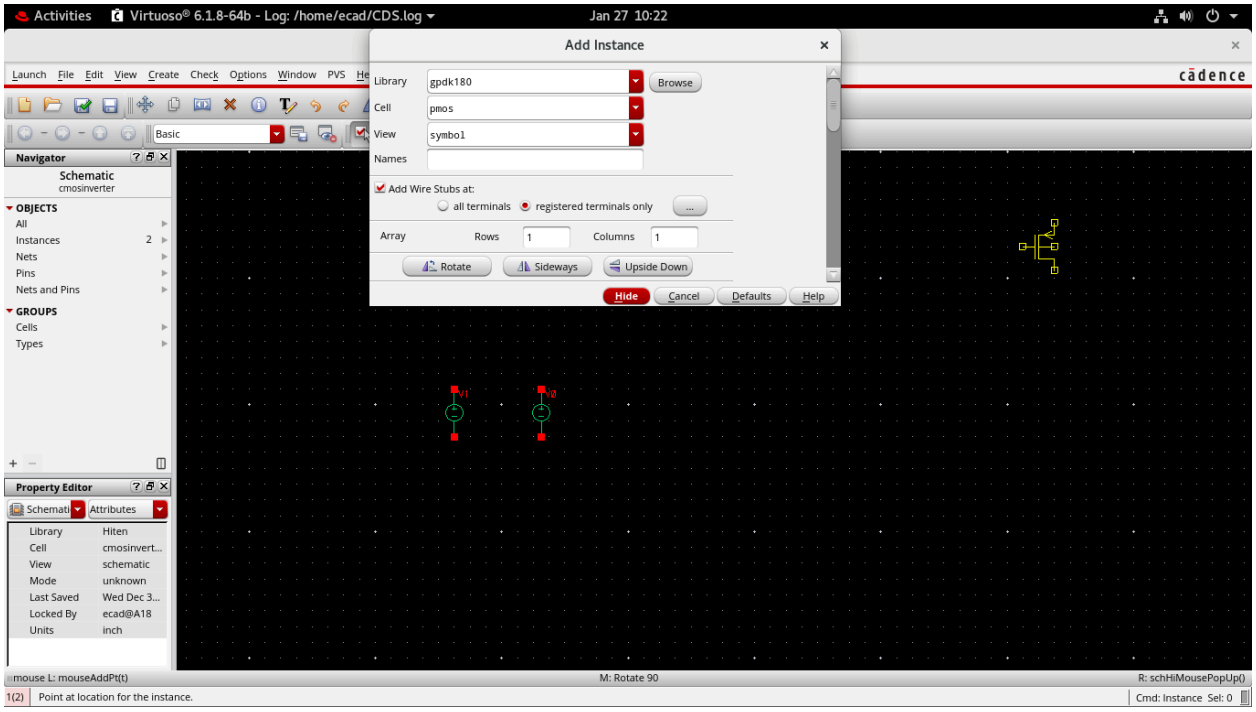

CMOS INVERTER SCHEMATIC

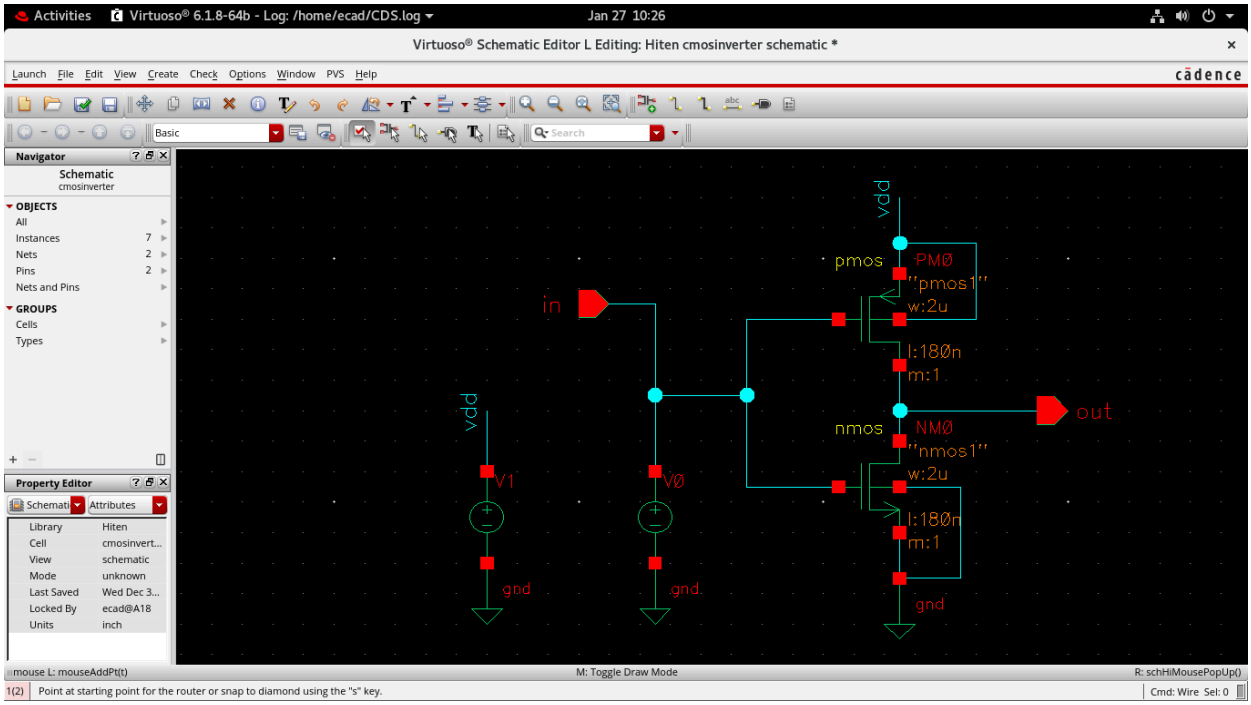

SIMULATION IN CADENCE VIRTUOSO :Launch >ADE L

DC ANALYSIS IN VIRTUOSO

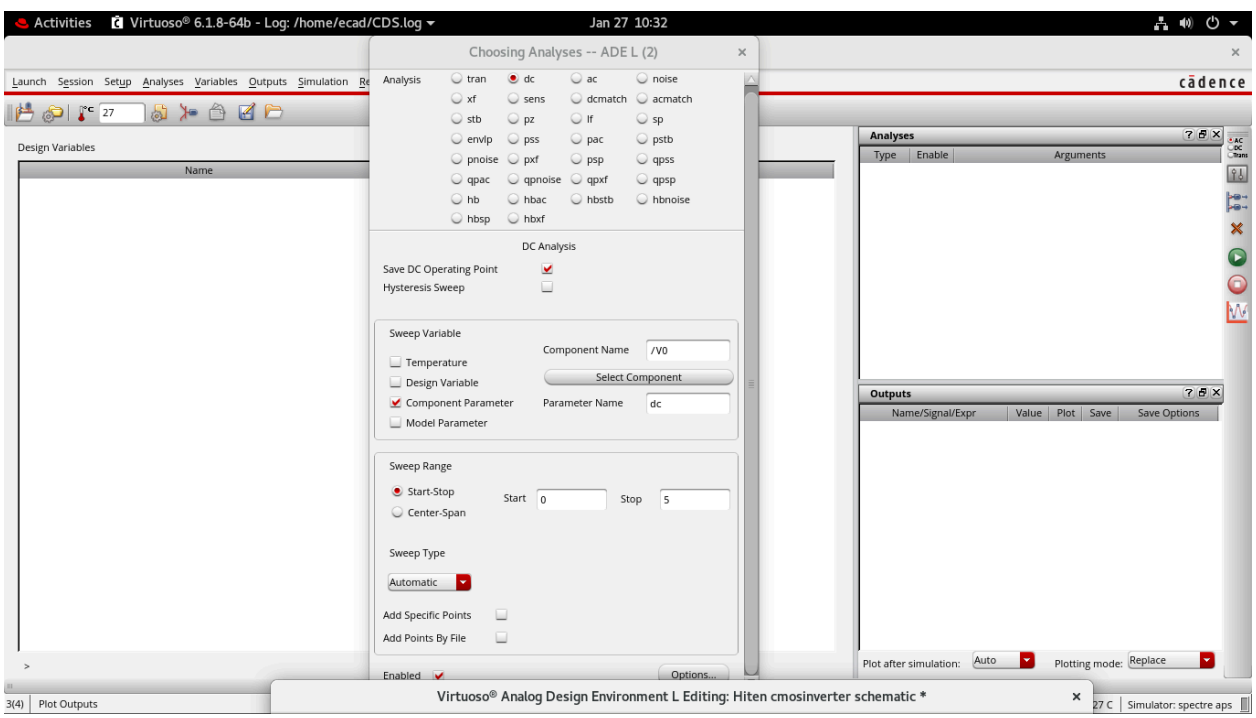

SELECT COMPONENT FOR DC ANALYSIS -V0

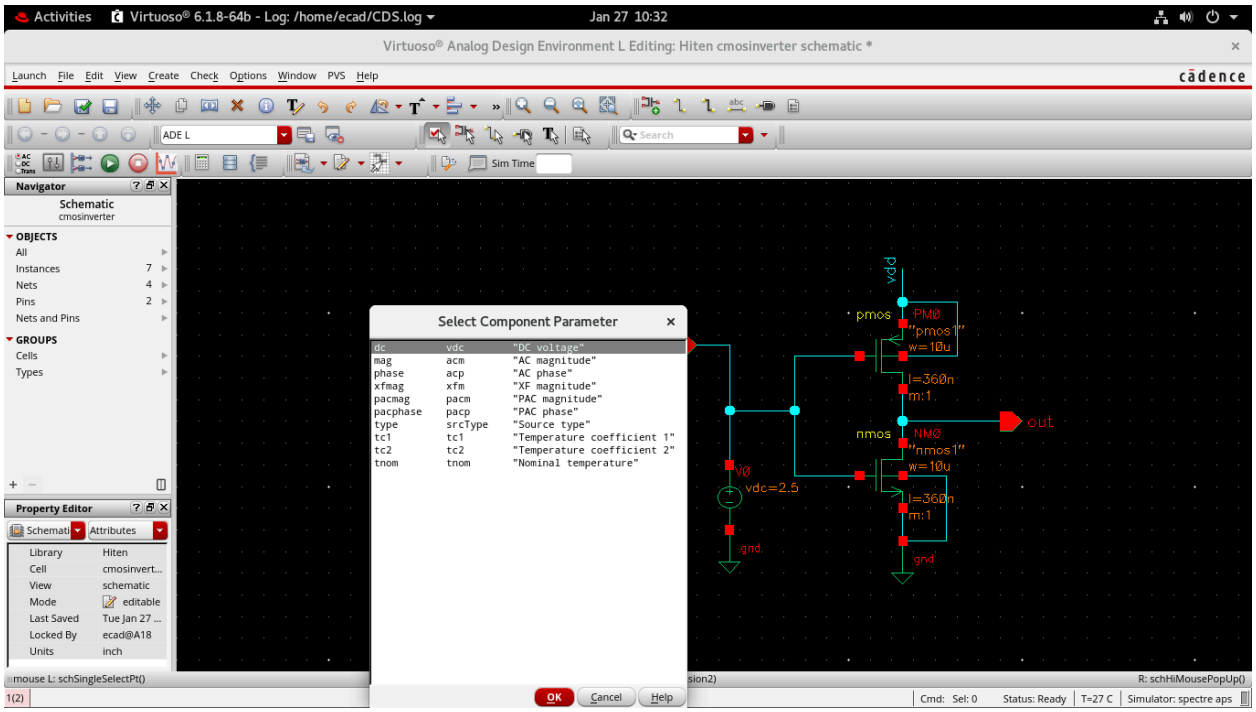

OUTPUT > TO BE PLOTTED > SELECT ON THE SCHEMATIC

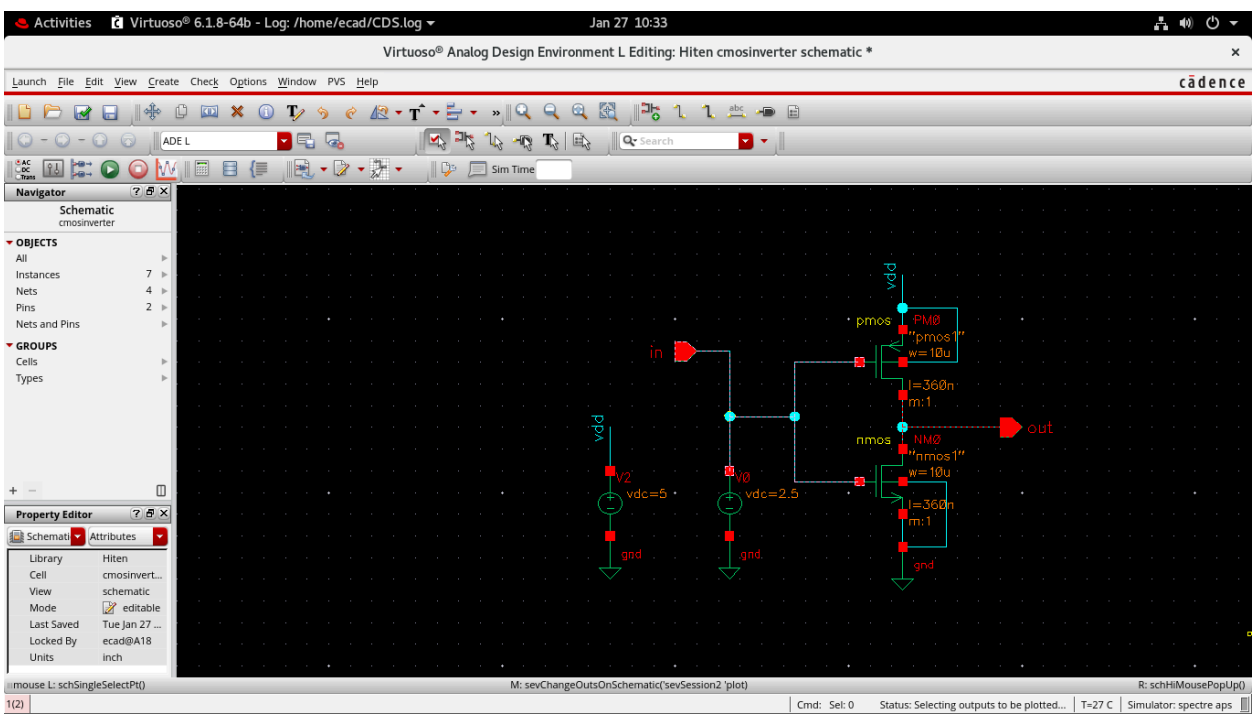

SIMULATION> NETLIST AND RUN

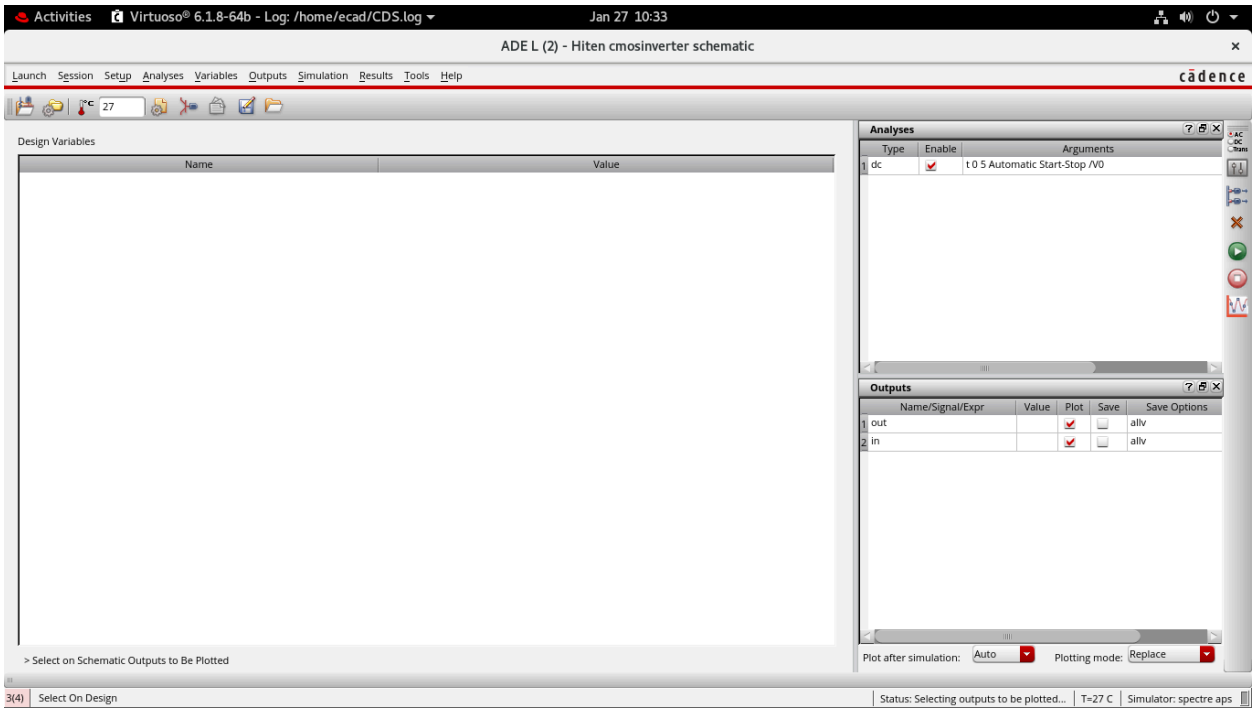

OUTPUT FOR DC ANALYSIS

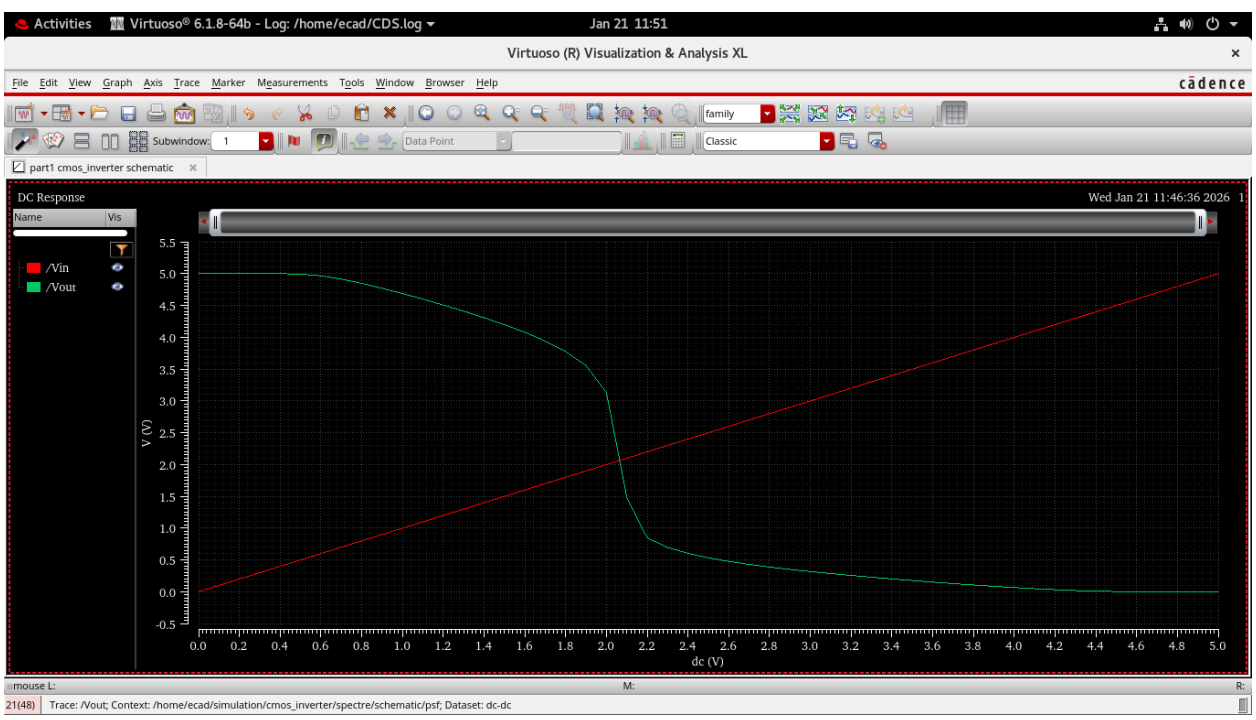

TRANSIENT ANALYSIS STEPWISE

STEP-01

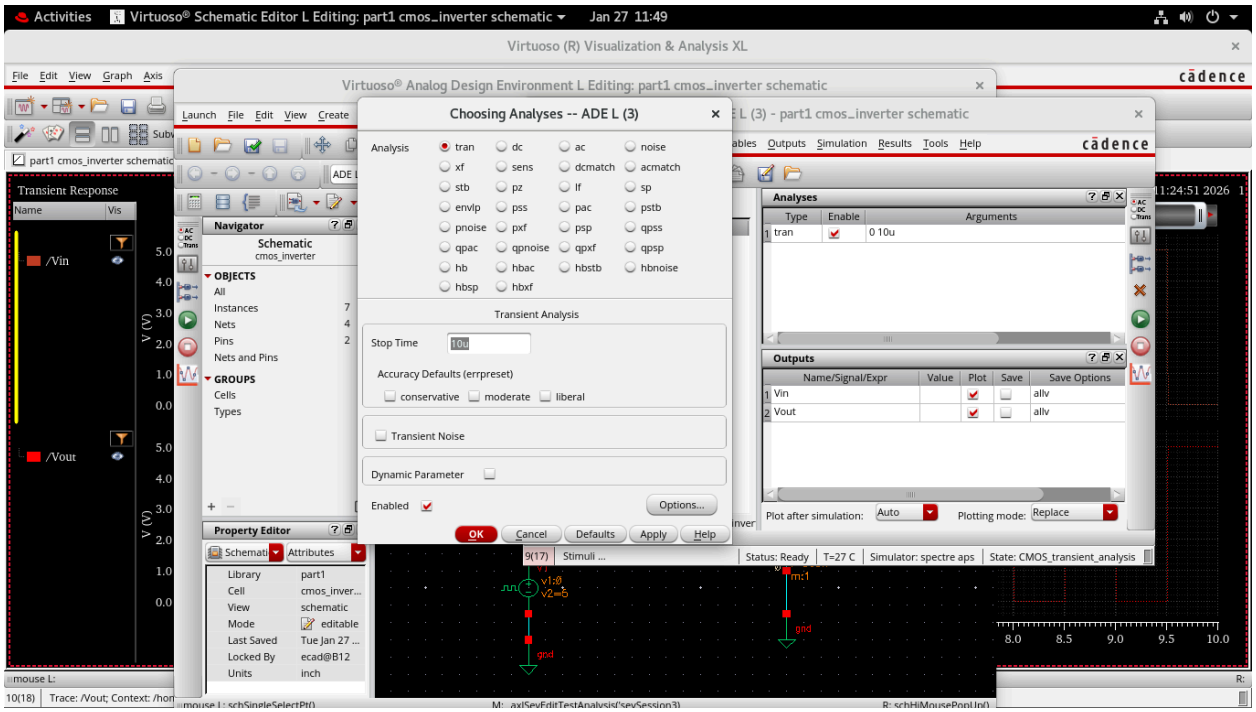

STEP-02

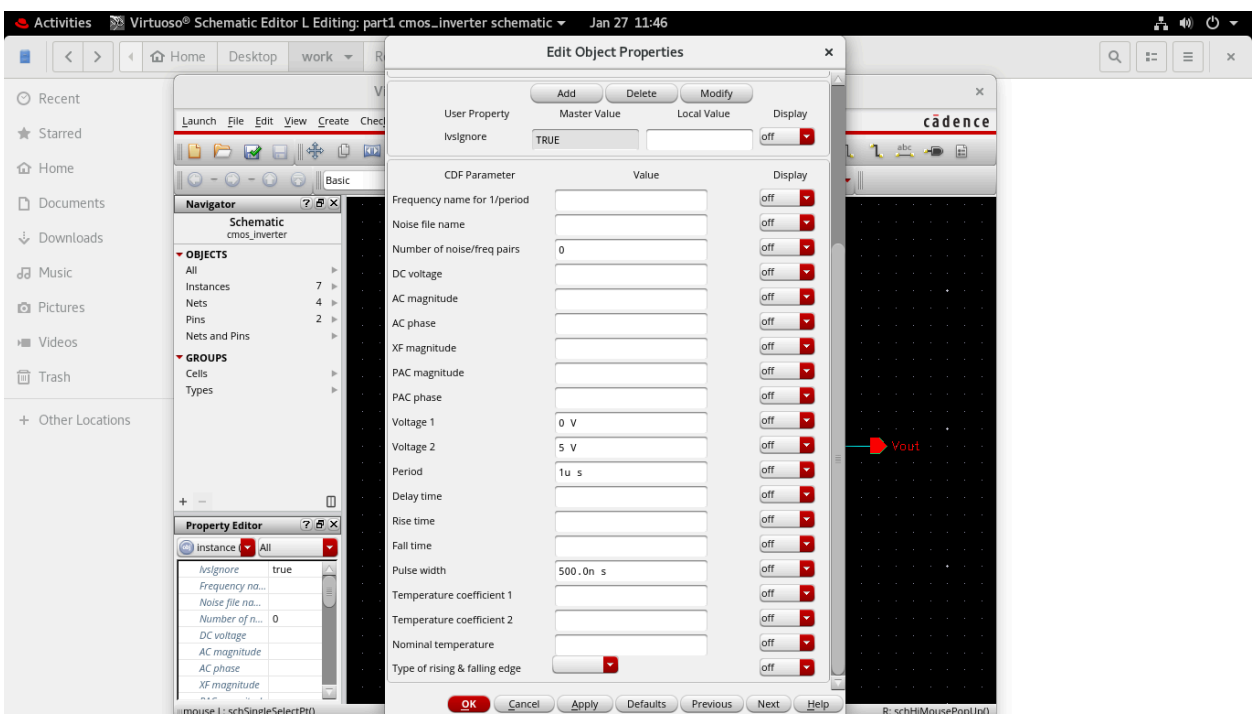

OUTPUT FOR TRANSIENT ANALYSIS

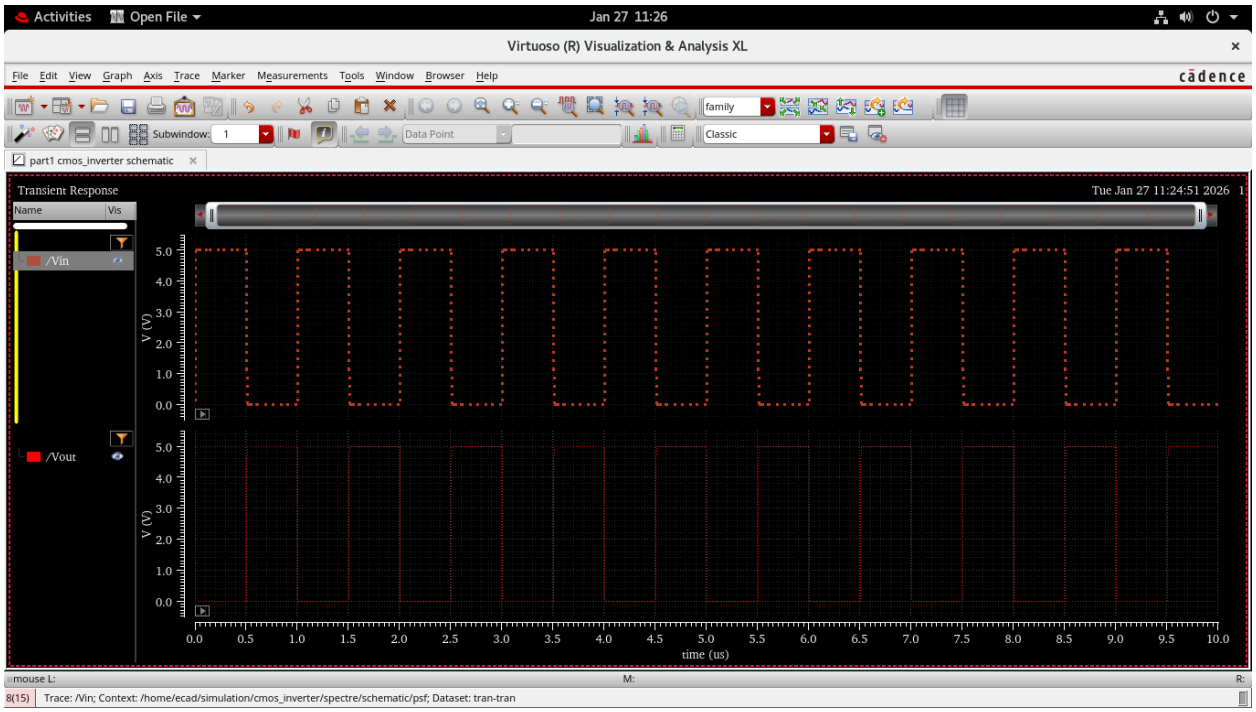
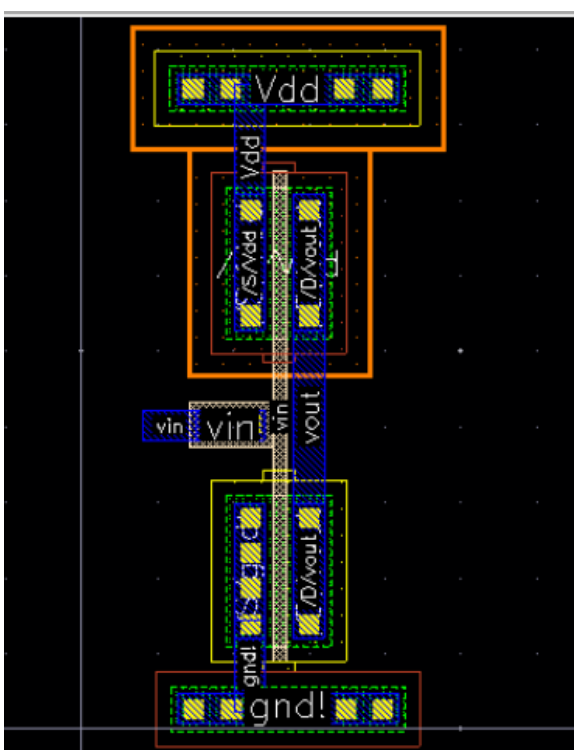
CMOS INVERTER LAYOUT SCHEMATIC