Faders are connected according to grey code.
FDR_6 and FDR_7, FDR_4 and FDR_5 have to be swapped.
Use regular order in next revision.

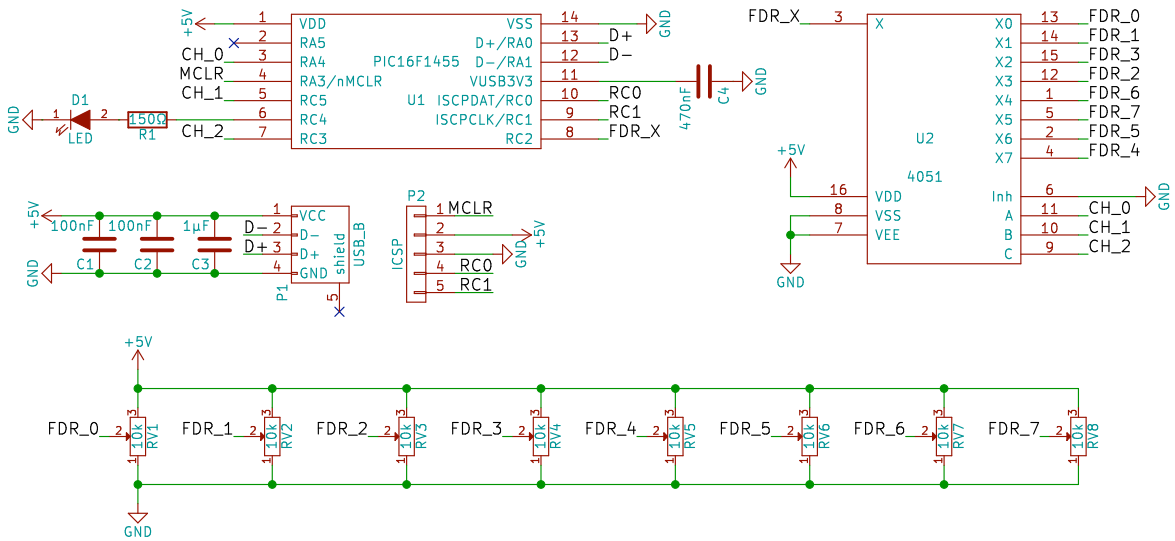

@koenaad
Koenraad Verheyden

Sheet: /
File: FDRbox.sch

Title: FDRbox v0.1

Size: A4	Date: 2016-09-01	**Rev: v0.1**
KiCad E.D.A. kicad 4.0.2-stable		Id: 1/1