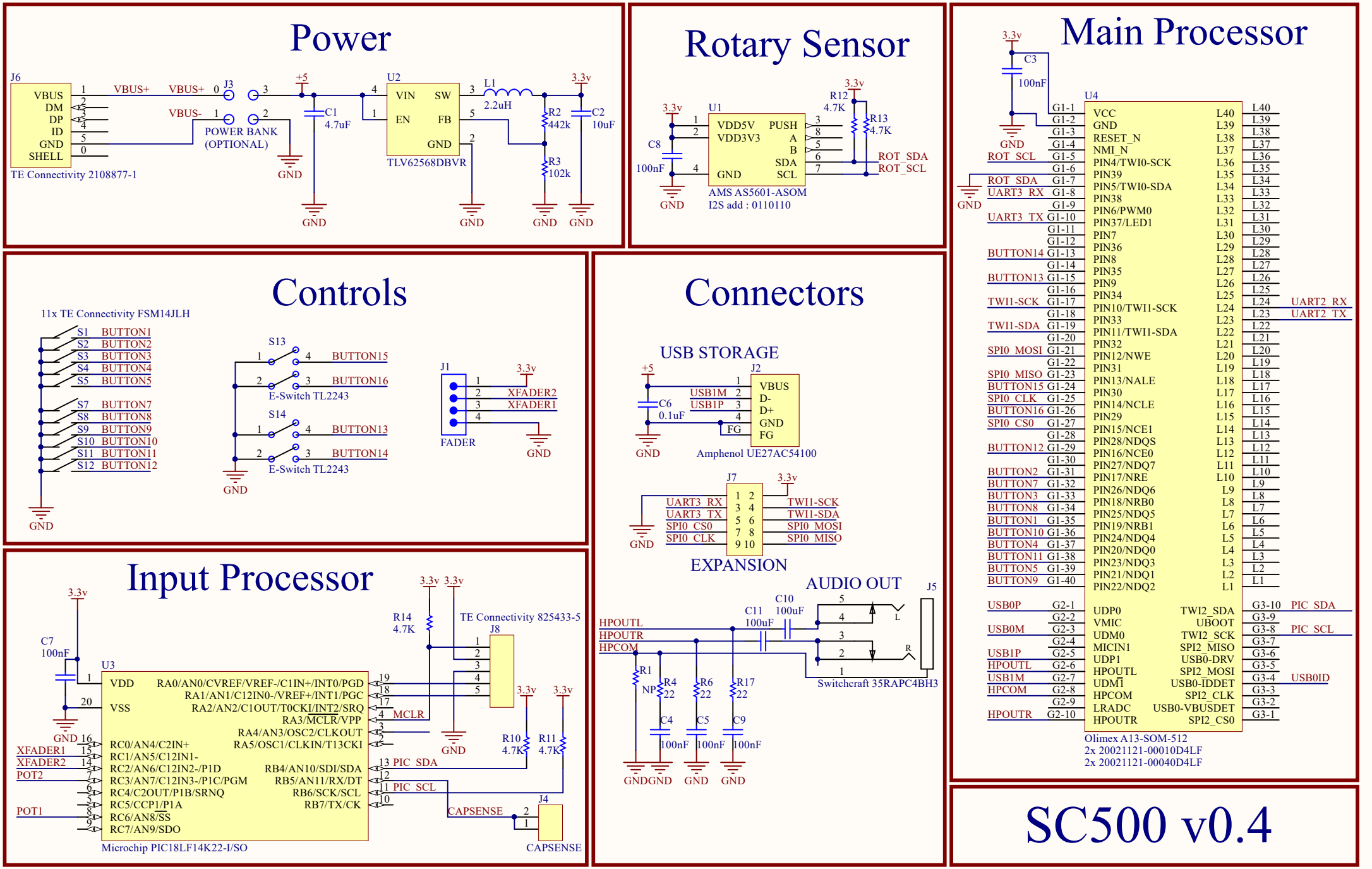
Power
J6
VBUS
DM
DP
ID
GND
SHELL
TE Connectivity 2108877-1
VBUS+
VBUS-
J3
POWER BANK
(OPTIONAL)
+5
C1
4.7uF
U2
VIN
SW
EN
FB
GND
TLV62568DBVR
L1
2.2uH
3.3v
R2
442k
R3
102k
C2
10uF
GND
Rotary Sensor
U1
VDD5V
VDD3V3
PUSH
A
B
SDA
SCL
GND
C8
100nF
R12
4.7K
R13
4.7K
ROT_SDA
ROT_SCL
AMS AS5601-ASOM
I2S add : 0110110
Main Processor
C3
100nF
U4
VCC
GND
RESET_N
NMI_N
PIN4/TWI0-SCK
PIN39
PIN5/TWI0-SDA
PIN38
PIN6/PWM0
PIN37/LED1
PIN7
PIN36
PIN8
PIN35
PIN9
PIN34
PIN10/TWI1-SCK
PIN33
PIN11/TWI1-SDA
PIN32
PIN12/NWE
PIN31
PIN13/NALE
PIN30
PIN14/NCLE
PIN29
PIN15/NCE1
PIN28/NDQS
PIN16/NCE0
PIN27/NDQ7
PIN17/NRE
PIN26/NDQ6
PIN18/NRB0
PIN25/NDQ5
PIN19/NRB1
PIN24/NDQ4
PIN20/NDQ0
PIN23/NDQ3
PIN21/NDQ1
PIN22/NDQ2
UDP0
VMIC
UDM0
MICIN1
UDP1
HPOUTL
UDM1
HPCOM
LRADC
HPOUTR
TWI2_SDA
UBOOT
TWI2_SCK
SPI2_MISO
USB0-DRV
SPI2_MOSI
USB0-IDDET
SPI2_CLK
USB0-VBUSDET
SPI2_CS0
ROT_SCL
ROT_SDA
UART3_RX
UART3_TX
BUTTON14
BUTTON13
TWI1-SCK
TWI1-SDA
SPI0_MOSI
SPI0_MISO
BUTTON15
SPI0_CLK
BUTTON16
SPI0_CS0
BUTTON12
BUTTON2
BUTTON7
BUTTON3
BUTTON8
BUTTON1
BUTTON10
BUTTON4
BUTTON11
BUTTON5
BUTTON9
USB0P
USB0M
USB1P
HPOUTL
USB1M
HPCOM
HPOUTR
UART2_RX
UART2_TX
PIC_SDA
PIC_SCL
USB0ID
Olimex A13-SOM-512
2x 20021121-00010D4LF
2x 20021121-00040D4LF
Controls
11x TE Connectivity FSM14JLH
S1 BUTTON1
S2 BUTTON2
S3 BUTTON3
S4 BUTTON4
S5 BUTTON5
S7 BUTTON7
S8 BUTTON8
S9 BUTTON9
S10 BUTTON10
S11 BUTTON11
S12 BUTTON12
S13
BUTTON15
BUTTON16
E-Switch TL2243
S14
BUTTON13
BUTTON14
E-Switch TL2243
J1
XFADER2
XFADER1
FADER
Connectors
USB STORAGE
J2
VBUS
D-
D+
GND
FG
USB1M
USB1P
C6
0.1uF
Amphenol UE27AC54100
J7
UART3_RX
UART3_TX
SPI0_CS0
SPI0_CLK
TWI1-SCK
TWI1-SDA
SPI0_MOSI
SPI0_MISO
EXPANSION
AUDIO OUT
J5
HPOUTL
HPOUTR
HPCOM
C11
100uF
C10
100uF
R1
NP
R4
22
R6
22
R17
22
C4
100nF
C5
100nF
C9
100nF
Switchcraft 35RAPC4BH3
Input Processor
U3
VDD
VSS
RA0/AN0/CVREF/VREF-/C1IN+/INT0/PGD
RA1/AN1/C12IN0-/VREF+/INT1/PGC
RA2/AN2/C1OUT/T0CKI/INT2/SRQ
RA3/MCLR/VPP
RA4/AN3/OSC2/CLKOUT
RA5/OSC1/CLKIN/T13CKI
RC0/AN4/C2IN+
RC1/AN5/C12IN1-
RC2/AN6/C12IN2-/P1D
RC3/AN7/C12IN3-/P1C/PGM
RC4/C2OUT/P1B/SRNQ
RC5/CCP1/P1A
RC6/AN8/SS
RC7/AN9/SDO
RB4/AN10/SDI/SDA
RB5/AN11/RX/DT
RB6/SCK/SCL
RB7/TX/CK
MCLR
PIC_SDA
PIC_SCL
C7
100nF
R14
4.7K
TE Connectivity 825433-5
J8
R10
4.7K
R11
4.7K
XFADER1
XFADER2
POT2
POT1
CAPSENSE
J4
Microchip PIC18LF14K22-I/SO
SC500 v0.4