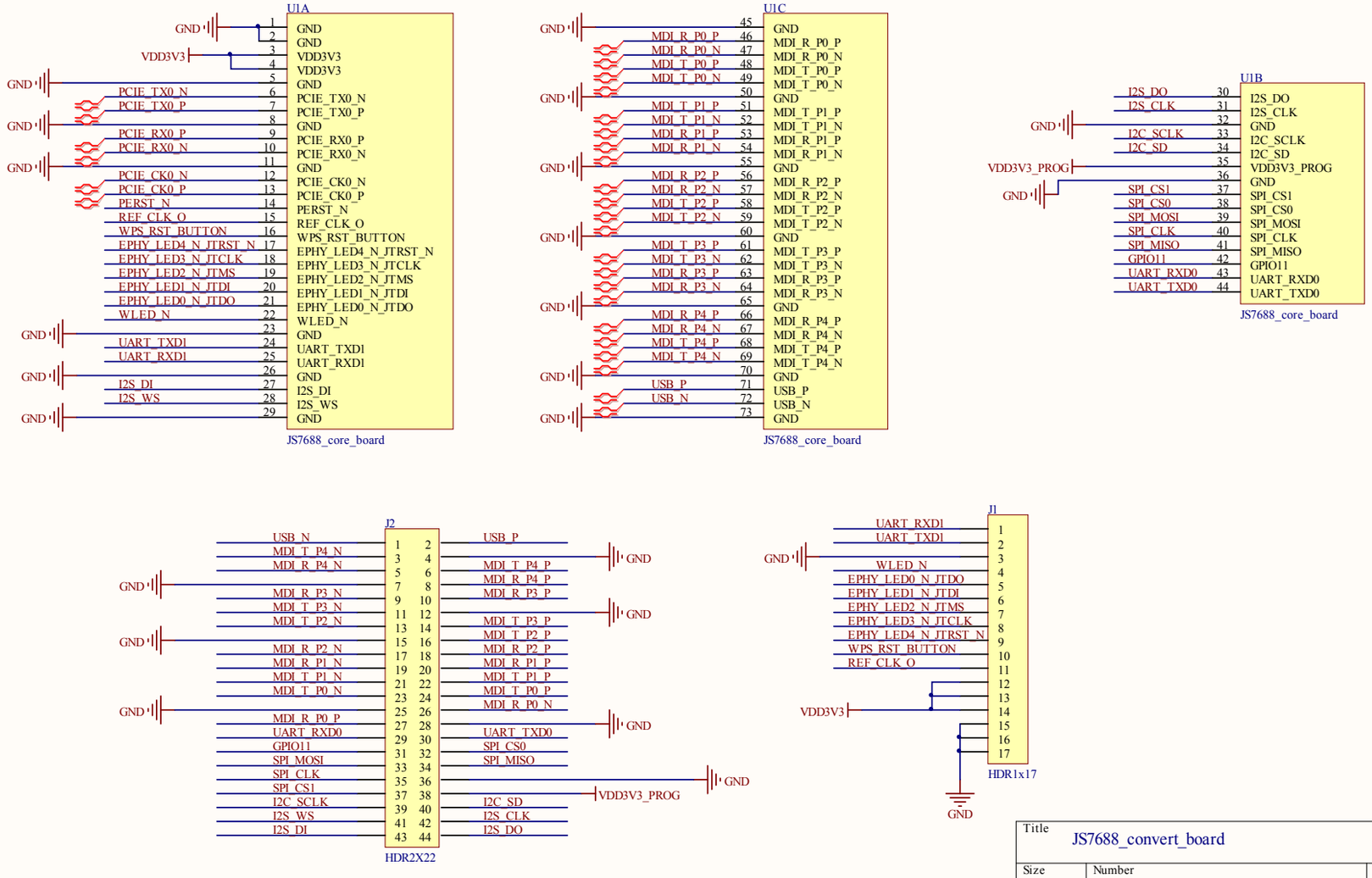

Title	JS7688_convert_board		
Size A4	Number		Revision V1.0
Date: 2018-05-19		Sheet of	
File: G:\ \..\JS7688_convert_board_v1.SchDoc		Drawn By: robinson	