UDOO
i.MX6Q OPEN SOURCE MODULE
REV.D
JUNE 2013

Legend

/X <FLAG /X> = NOT MOUNTED

Schematic Title: UDOO BOARD	Created By: UDOO TEAM
Size: A3	Page Name: COVER
Rev: D	
Date: Monday, August 05, 2013	Sheet 1 of 17

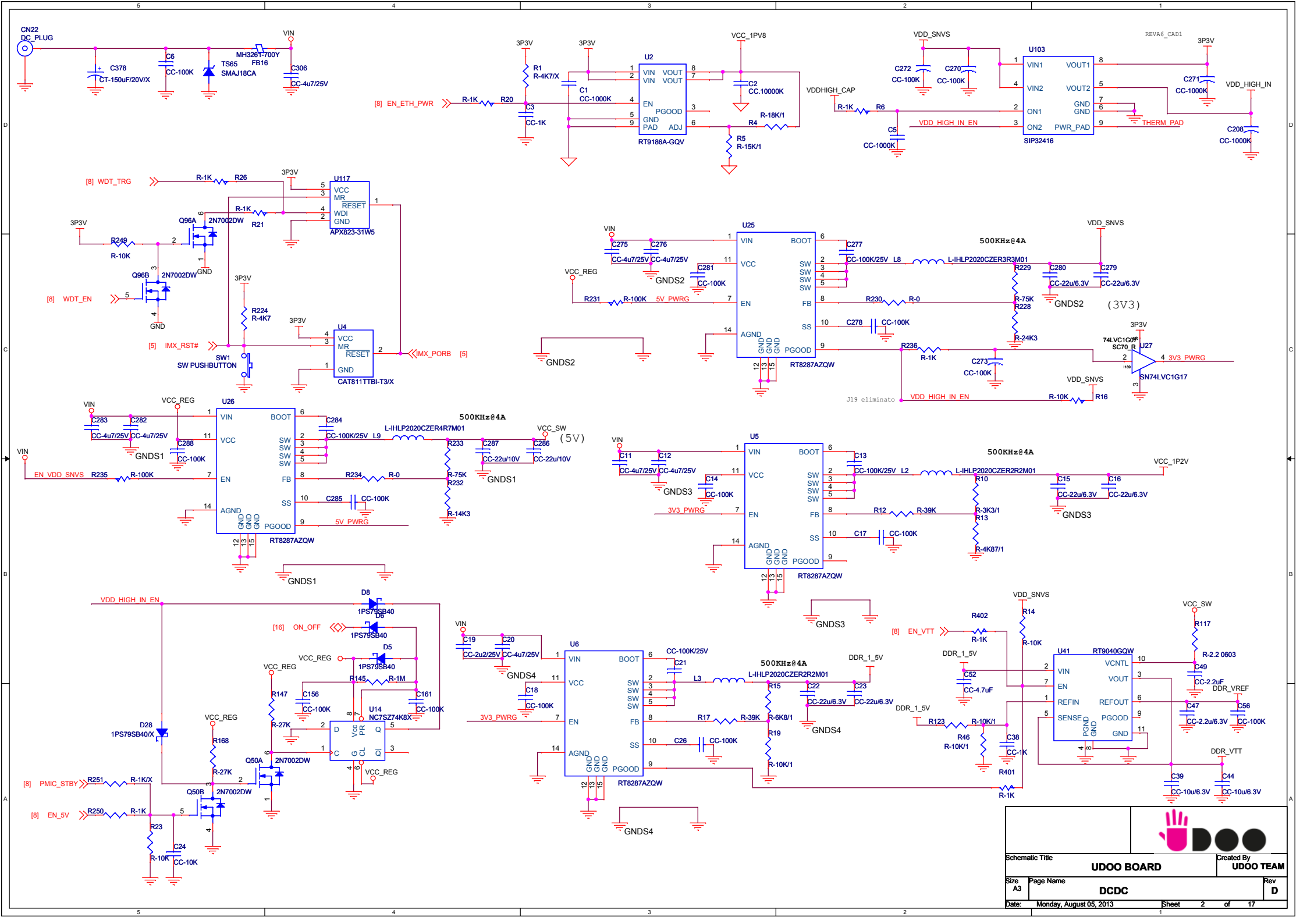
CN22
DC_PLUG
C378
CT-150uF/20V/X
C6
CC-100K
TS65
SMAJ18CA
MH3261-700Y
FB16
VIN
C306
CC-4u7/25V
3P3V
R1
R-4K7/X
C1
CC-1000K
U2
VIN VOUT
VIN VOUT
EN
PGOOD
GND
PAD ADJ
RT9186A-GQV
VCC_1PV8
C2
CC.10000K
R-18K/1
R4
R5
R-15K/1
[8] EN_ETH_PWR
R-1K
R20
C3
CC-1K
VDD_SNVS
C272
CC-100K
C270
CC-100K
U103
VIN1
VIN2
ON1
ON2
VOUT1
VOUT2
GND
GND
PWR_PAD
SIP32416
REVA6_CAD1
C271
CC-1000K
VDD_HIGH_IN
C208
CC-1000K
VDDHIGH_CAP
R-1K
R6
VDD_HIGH_IN_EN
C5
CC-1000K
THERM_PAD
[8] WDT_TRG
R-1K
R26
U117
VCC
MR
RESET
WDI
GND
APX823-31W5
R-1K
R21
Q96A
2N7002DW
R249
R-10K
Q96B
2N7002DW
[8] WDT_EN
R224
R-4K7
[5] IMX_RST#
SW1
SW PUSHBUTTON
U4
VCC
MR
RESET
GND
CAT811TTBI-T3/X
IMX_PORB [5]
VIN
C275
C276
CC-4u7/25V
CC-4u7/25V
GNDS2
C281
CC-100K
VCC_REG
R231
R-100K
5V_PWRG
U25
VIN
VCC
EN
AGND
BOOT
SW
FB
SS
PGOOD
RT8287AZQW
C277
CC-100K/25V
L8
L-IHLP2020CZER3R3M01
500KHz@4A
R230
R-0
C278
CC-100K
R236
R-1K
C273
CC-100K
J19 eliminato
VDD_HIGH_IN_EN
R229
R-75K
R228
R-24K3
C280
CC-22u/6.3V
C279
CC-22u/6.3V
GNDS2
(3V3)
VDD_SNVS
R-10K
R16
3P3V
74LVC1G07
SC70_R
U27
SN74LVC1G17
3V3_PWRG
VIN
C283
C282
CC-4u7/25V
CC-4u7/25V
GNDS1
C288
CC-100K
VCC_REG
U26
VIN
VCC
EN
AGND
BOOT
SW
FB
SS
PGOOD
RT8287AZQW
EN_VDD_SNVS
R235
R-100K
C284
CC-100K/25V
L9
L-IHLP2020CZER4R7M01
500KHz@4A
VCC_SW
(5V)
R233
R-75K
R232
R-14K3
C287
CC-22u/10V
C286
CC-22u/10V
GNDS1
R234
R-0
C285
CC-100K
5V_PWRG
VIN
C11
C12
CC-4u7/25V
CC-4u7/25V
GNDS3
C14
CC-100K
3V3_PWRG
U5
VIN
VCC
EN
AGND
BOOT
SW
FB
SS
PGOOD
RT8287AZQW
C13
CC-100K/25V
L2
L-IHLP2020CZER2R2M01
500KHz@4A
VCC_1P2V
R10
R-3K3/1
R13
R-4K87/1
C15
CC-22u/6.3V
C16
CC-22u/6.3V
GNDS3
R12
R-39K
C17
CC-100K
VDD_HIGH_IN_EN
D8
1PS79SB40
D9
1PS79SB40
[16] ON_OFF
D5
1PS79SB40
VCC_REG
R145
R-1M
R147
R-27K
C156
CC-100K
C161
CC-100K
U14
NC7SZ74K8X
D
Vcc
PR
Q
C
G
CL
QI
D28
1PS79SB40/X
R168
R-27K
Q50A
2N7002DW
Q50B
2N7002DW
[8] PMIC_STBY
R251
R-1K/X
[8] EN_5V
R250
R-1K
R23
R-10K
C24
CC-10K
VIN
C19
C20
CC-2u2/25V
CC-4u7/25V
GNDS4
C18
CC-100K
3V3_PWRG
U6
VIN
VCC
EN
AGND
BOOT
SW
FB
SS
PGOOD
RT8287AZQW
CC-100K/25V
C21
L3
L-IHLP2020CZER2R2M01
500KHz@4A
DDR_1_5V
C22
CC-22u/6.3V
C23
CC-22u/6.3V
GNDS4
R15
R-6K8/1
R17
R-39K
R19
R-10K/1
C26
CC-100K
[8] EN_VTT
R402
R-1K
R14
R-10K
DDR_1_5V
C52
CC-4.7uF
U41
RT9040GQW
VIN
EN
REFIN
SENSE
VCNTL
VOUT
REFOUT
PGOOD
GND
PGND
GND
DDR_1_5V
R123
R-10K/1
R46
R-10K/1
C38
CC-1K
R401
R-1K
VCC_SW
R117
R-2.2 0603
C49
CC-2.2uF
DDR_VREF
C47
CC-2.2u/6.3V
C56
CC-100K
DDR_VTT
C39
CC-10u/6.3V
C44
CC-10u/6.3V
Schematic Title
UDOO BOARD
Created By
UDOO TEAM
Size
A3
Page Name
DCDC
Rev
D
Date:
Monday, August 05, 2013
Sheet
2
of
17

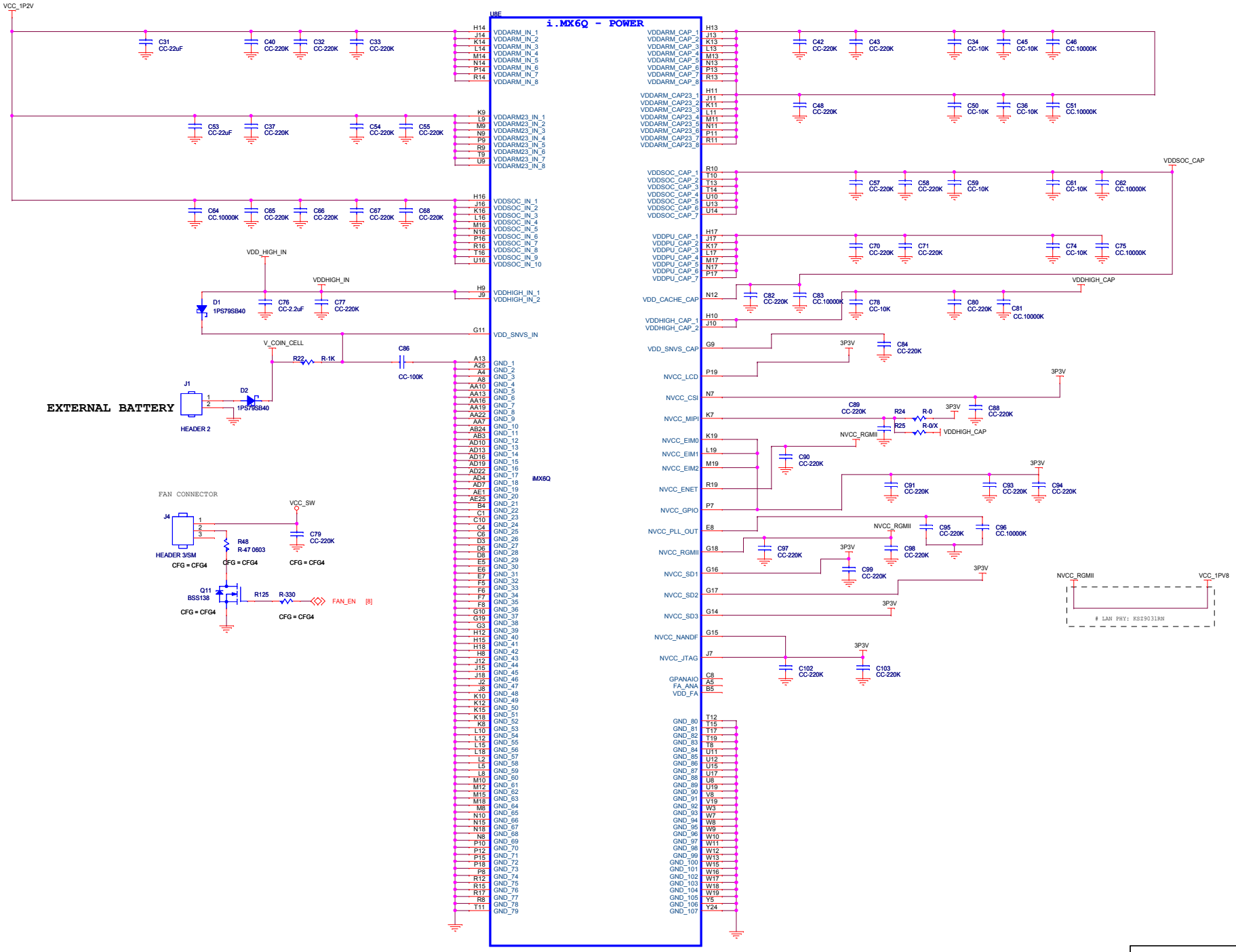
i.MX6Q - POWER
U8E
iMX6Q
VCC_1P2V
VDD_HIGH_IN
VDDHIGH_IN
V_COIN_CELL
EXTERNAL BATTERY
HEADER 2
FAN CONNECTOR
HEADER 3/SM
VCC_SW
FAN_EN [8]
VDDSOC_CAP
VDDHIGH_CAP
NVCC_RGMII
VCC_1PV8
LAN PHY: KSZ9031RN
UDOO BOARD
UDOO TEAM
i.MX6 POWER
Monday, August 05, 2013

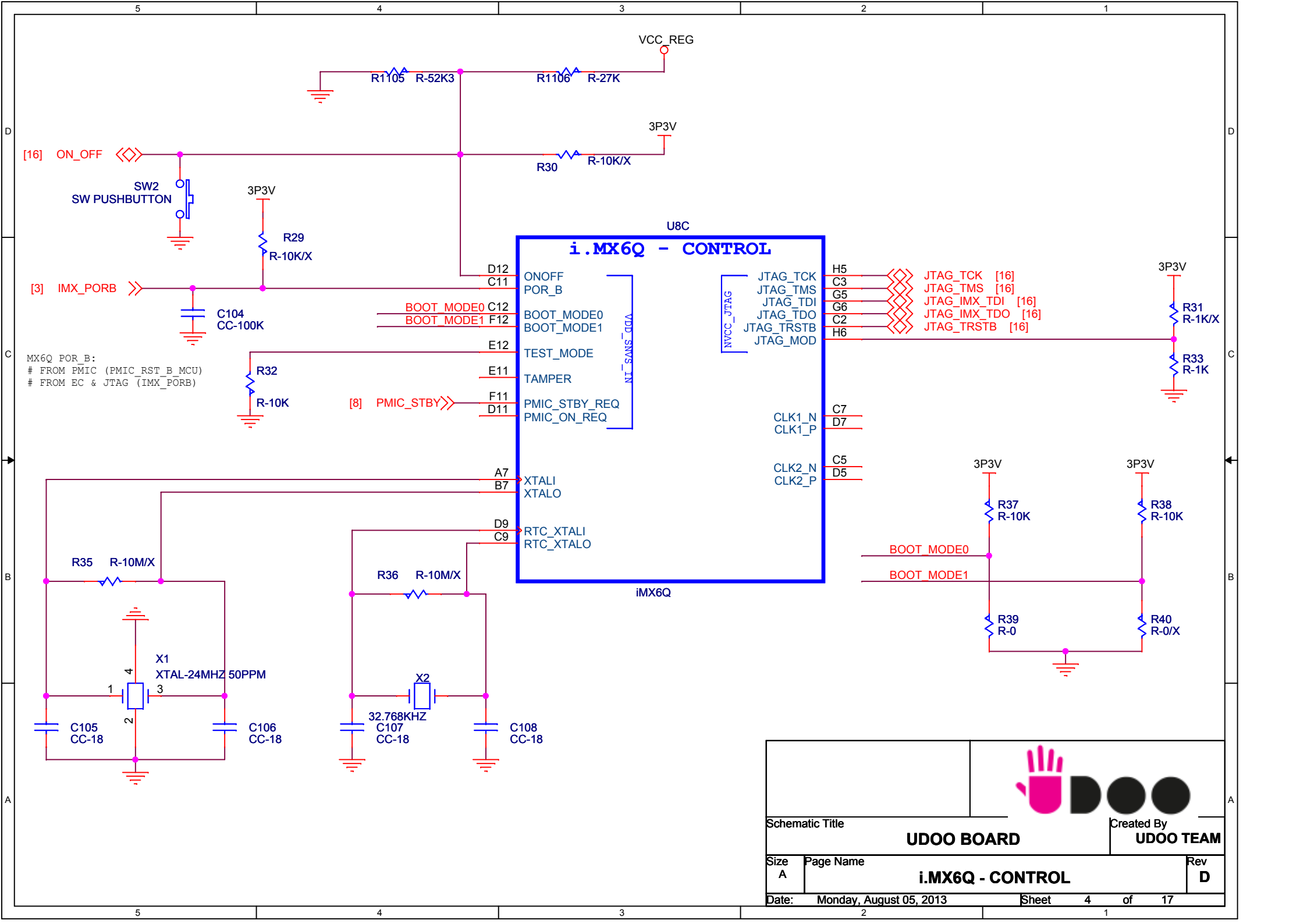

Schematic Title: UDOO BOARD		Created By: UDOO TEAM
Size: A	Page Name: i.MX6Q - CONTROL	Rev: D
Date: Monday, August 05, 2013	Sheet 4 of 17	

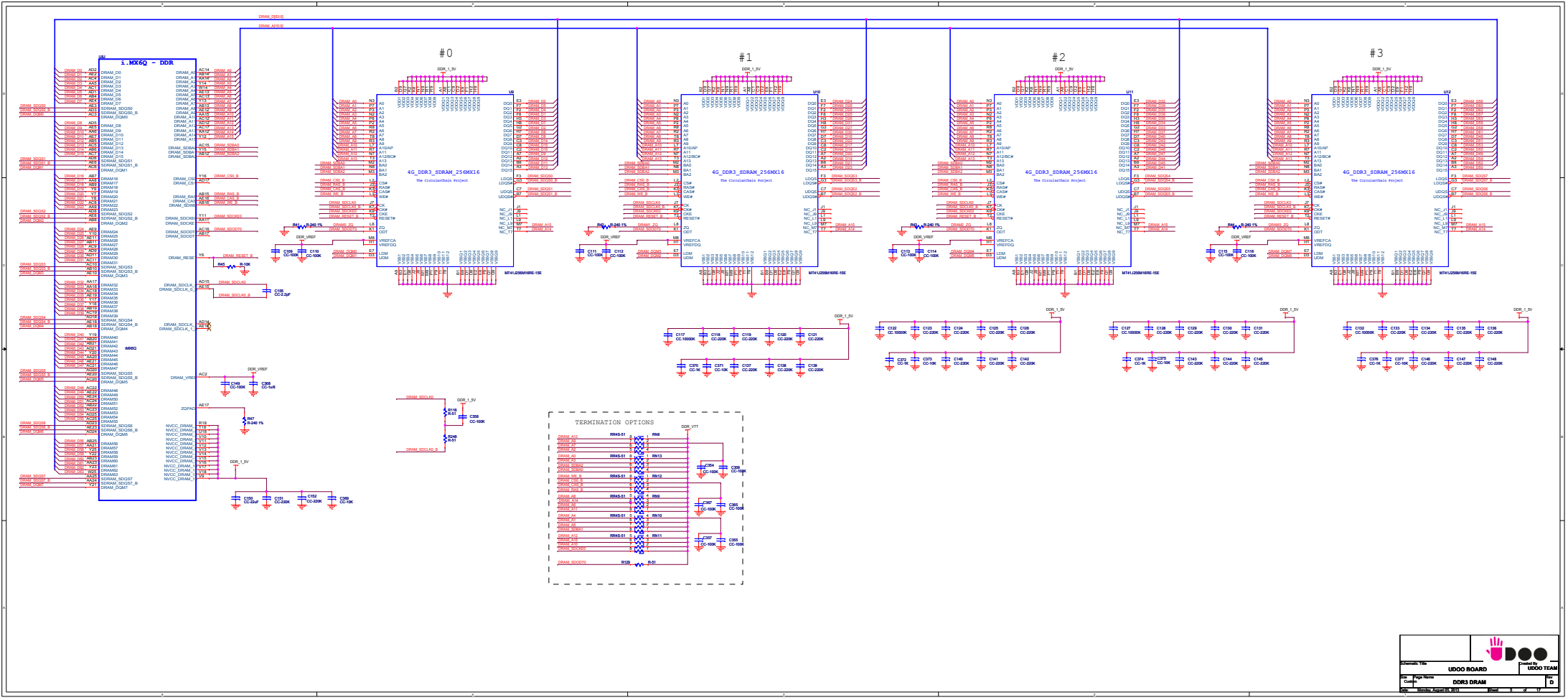
i.MX6Q - DDR
#0
#1
#2
#3
4G_DDR3_SDRAM_256MX16
TERMINATION OPTIONS
UDOO BOARD
UDOO TEAM
DDR3 DRAM

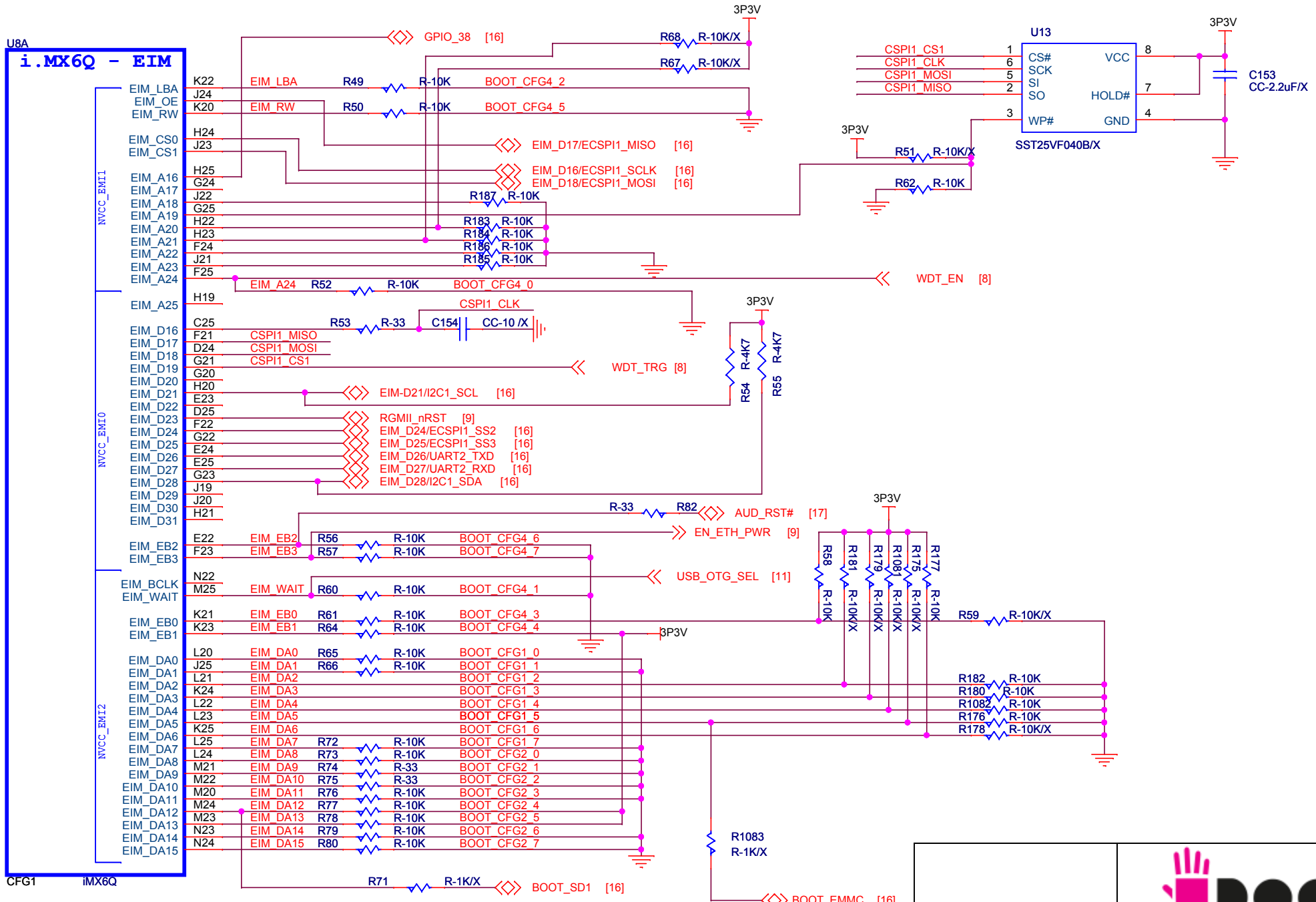
U8A
i.MX6Q - EIM
CFG1
iMX6Q
NVCC_EMI1
NVCC_EMI0
NVCC_EMI2
EIM_LBA
EIM_OE
EIM_RW
EIM_CS0
EIM_CS1
EIM_A16
EIM_A17
EIM_A18
EIM_A19
EIM_A20
EIM_A21
EIM_A22
EIM_A23
EIM_A24
EIM_A25
EIM_D16
EIM_D17
EIM_D18
EIM_D19
EIM_D20
EIM_D21
EIM_D22
EIM_D23
EIM_D24
EIM_D25
EIM_D26
EIM_D27
EIM_D28
EIM_D29
EIM_D30
EIM_D31
EIM_EB2
EIM_EB3
EIM_BCLK
EIM_WAIT
EIM_EB0
EIM_EB1
EIM_DA0
EIM_DA1
EIM_DA2
EIM_DA3
EIM_DA4
EIM_DA5
EIM_DA6
EIM_DA7
EIM_DA8
EIM_DA9
EIM_DA10
EIM_DA11
EIM_DA12
EIM_DA13
EIM_DA14
EIM_DA15
3P3V
GPIO_38 [16]
R68 R-10K/X
R67 R-10K/X
R49 R-10K BOOT_CFG4_2
R50 R-10K BOOT_CFG4_5
EIM_D17/ECSPI1_MISO [16]
EIM_D16/ECSPI1_SCLK [16]
EIM_D18/ECSPI1_MOSI [16]
R187 R-10K
R183 R-10K
R184 R-10K
R186 R-10K
R185 R-10K
R52 R-10K BOOT_CFG4_0
WDT_EN [8]
CSPI1_CLK
R53 R-33
C154 CC-10 /X
CSPI1_MISO
CSPI1_MOSI
CSPI1_CS1
WDT_TRG [8]
EIM-D21/I2C1_SCL [16]
R54 R-4K7
R55 R-4K7
RGMII_nRST [9]
EIM_D24/ECSPI1_SS2 [16]
EIM_D25/ECSPI1_SS3 [16]
EIM_D26/UART2_TXD [16]
EIM_D27/UART2_RXD [16]
EIM_D28/I2C1_SDA [16]
R-33 R82
AUD_RST# [17]
EN_ETH_PWR [9]
USB_OTG_SEL [11]
R56 R-10K BOOT_CFG4_6
R57 R-10K BOOT_CFG4_7
R60 R-10K BOOT_CFG4_1
R61 R-10K BOOT_CFG4_3
R64 R-10K BOOT_CFG4_4
R65 R-10K BOOT_CFG1_0
R66 R-10K BOOT_CFG1_1
EIM_DA2 BOOT_CFG1_2
EIM_DA3 BOOT_CFG1_3
EIM_DA4 BOOT_CFG1_4
EIM_DA5 BOOT_CFG1_5
EIM_DA6 BOOT_CFG1_6
R72 R-10K BOOT_CFG1_7
R73 R-10K BOOT_CFG2_0
R74 R-33 BOOT_CFG2_1
R75 R-33 BOOT_CFG2_2
R76 R-10K BOOT_CFG2_3
R77 R-10K BOOT_CFG2_4
R78 R-10K BOOT_CFG2_5
R79 R-10K BOOT_CFG2_6
R80 R-10K BOOT_CFG2_7
R71 R-1K/X
BOOT_SD1 [16]
R1083 R-1K/X
BOOT_EMMC [16]
R58 R-10K
R181 R-10K/X
R179 R-10K/X
R1081 R-10K/X
R175 R-10K/X
R177 R-10K
R59 R-10K/X
R182 R-10K
R180 R-10K
R1082 R-10K
R176 R-10K
R178 R-10K/X
U13
CSPI1_CS1
CSPI1_CLK
CSPI1_MOSI
CSPI1_MISO
CS#
SCK
SI
SO
WP#
VCC
HOLD#
GND
SST25VF040B/X
R51 R-10K/X
R62 R-10K
C153
CC-2.2uF/X
Schematic Title
UDOO BOARD
Created By
UDOO TEAM
Size
A4
Page Name
i.MX6Q - EIM/STRAP BOOT
Rev
D
Date: Monday, August 05, 2013
Sheet 6 of 17

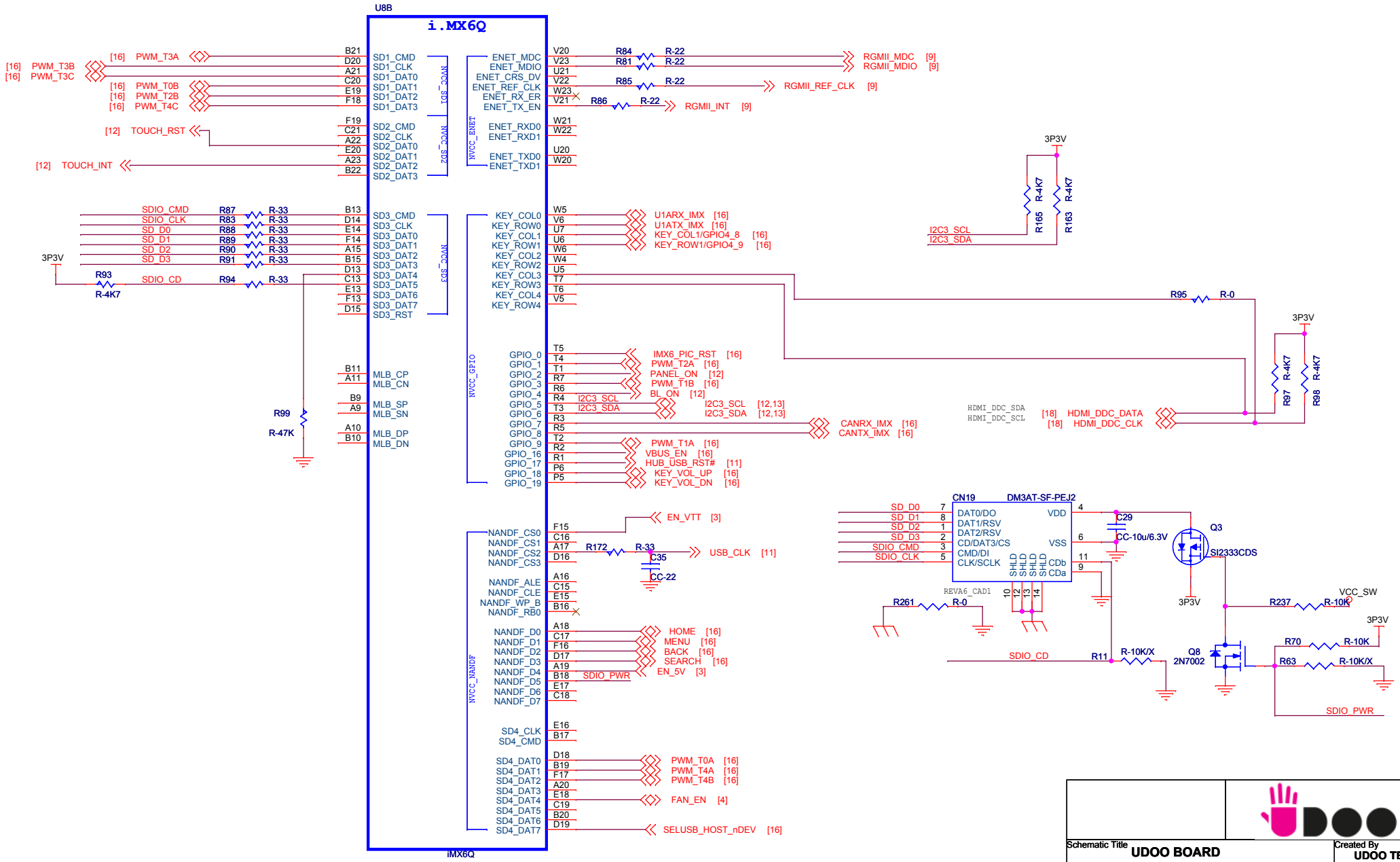

Schematic Title	UDOO BOARD
Created By	UDOO TEAM
Size	B
Page Name	SDIO INTERFACE
Rev	D
Date:	Monday, August 05, 2013
Sheet	7 of 17

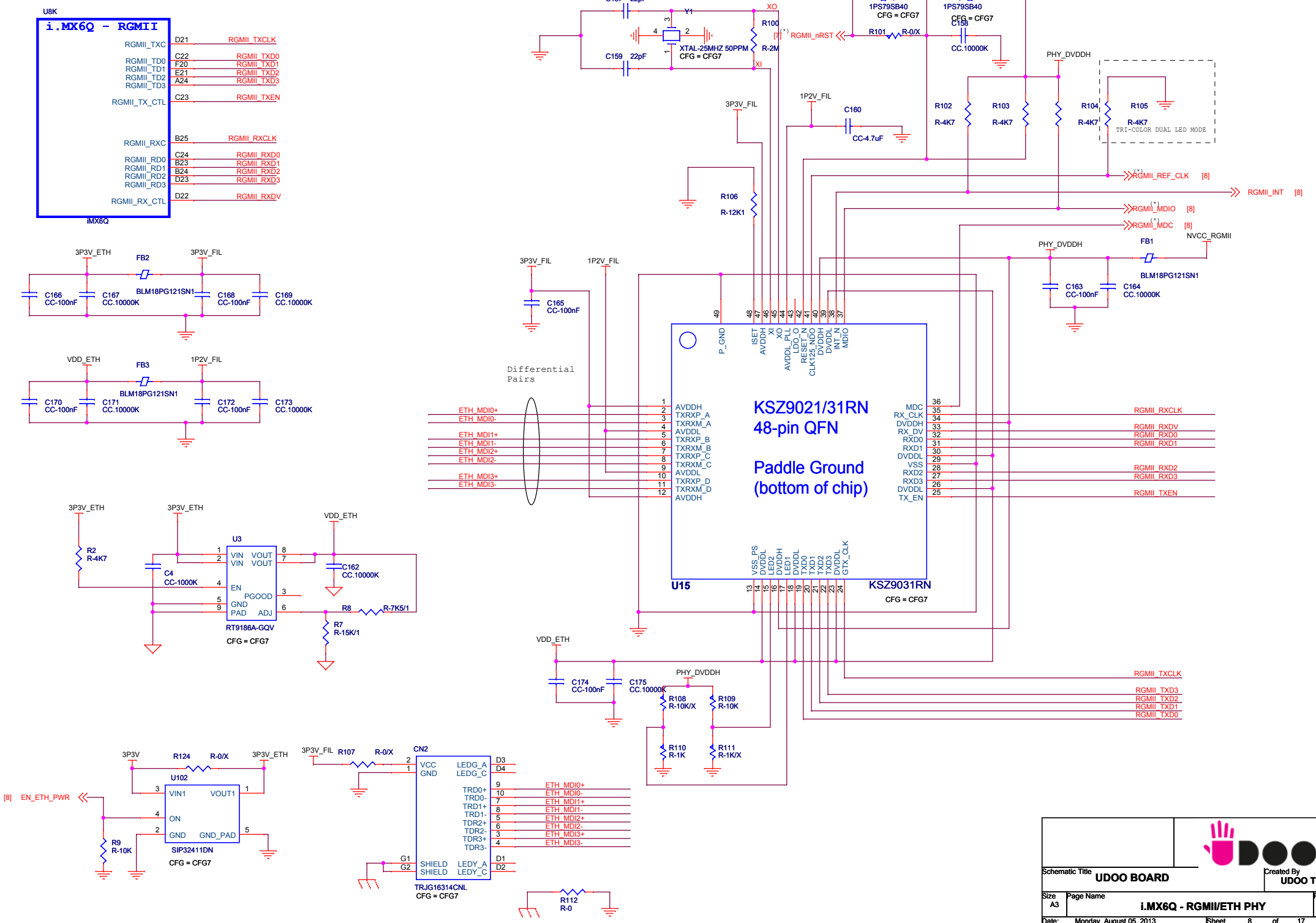
U8K
i.MX6Q - RGMII
RGMII_TXC
RGMII_TD0
RGMII_TD1
RGMII_TD2
RGMII_TD3
RGMII_TX_CTL
RGMII_RXC
RGMII_RD0
RGMII_RD1
RGMII_RD2
RGMII_RD3
RGMII_RX_CTL
D21 RGMII_TXCLK
C22 RGMII_TXD0
F20 RGMII_TXD1
E21 RGMII_TXD2
A24 RGMII_TXD3
C23 RGMII_TXEN
B25 RGMII_RXCLK
C24 RGMII_RXD0
B23 RGMII_RXD1
B24 RGMII_RXD2
D23 RGMII_RXD3
D22 RGMII_RXDV
iMX6Q
C157 22pF
C159 22pF
Y1
XTAL-25MHZ 50PPM
CFG = CFG7
XO
XI
R100
R-2M
[7] (*) RGMII_nRST
D3
1PS79SB40
CFG = CFG7
D4
1PS79SB40
CFG = CFG7
R101 R-0/X
C158
CC.10000K
PHY_DVDDH
R102 R-4K7
R103 R-4K7
R104 R-4K7
R105 R-4K7
TRI-COLOR DUAL LED MODE
3P3V_FIL
1P2V_FIL
C160
CC-4.7uF
R106
R-12K1
(*) RGMII_REF_CLK [8]
RGMII_INT [8]
(*) RGMII_MDIO [8]
(*) RGMII_MDC [8]
NVCC_RGMII
FB1
BLM18PG121SN1
C163 CC-100nF
C164 CC.10000K
C165 CC-100nF
Differential Pairs
KSZ9021/31RN
48-pin QFN
Paddle Ground
(bottom of chip)
U15
KSZ9031RN
CFG = CFG7
P_GND
ISET
AVDDH
XI
XO
AVDDL_PLL
LDO_O
RESET_N
CLK125_NDO
DVDDH
DVDDL
INT_N
MDIO
AVDDH
TXRXP_A
TXRXM_A
AVDDL
TXRXP_B
TXRXM_B
TXRXP_C
TXRXM_C
AVDDL
TXRXP_D
TXRXM_D
AVDDH
ETH_MDI0+
ETH_MDI0-
ETH_MDI1+
ETH_MDI1-
ETH_MDI2+
ETH_MDI2-
ETH_MDI3+
ETH_MDI3-
MDC
RX_CLK
DVDDH
RX_DV
RXD0
RXD1
DVDDL
VSS
RXD2
RXD3
DVDDL
TX_EN
RGMII_RXCLK
RGMII_RXDV
RGMII_RXD0
RGMII_RXD1
RGMII_RXD2
RGMII_RXD3
RGMII_TXEN
VSS_PS
DVDDL
LED2
DVDDH
LED1
DVDDL
TXD0
TXD1
TXD2
TXD3
DVDDL
GTX_CLK
RGMII_TXCLK
RGMII_TXD3
RGMII_TXD2
RGMII_TXD1
RGMII_TXD0
3P3V_ETH
FB2
BLM18PG121SN1
C166 CC-100nF
C167 CC.10000K
C168 CC-100nF
C169 CC.10000K
VDD_ETH
FB3
BLM18PG121SN1
C170 CC-100nF
C171 CC.10000K
C172 CC-100nF
C173 CC.10000K
U3
RT9186A-GQV
CFG = CFG7
VIN
VOUT
EN
PGOOD
GND
PAD
ADJ
R2 R-4K7
C4 CC-1000K
C162 CC.10000K
R8 R-7K5/1
R7 R-15K/1
C174 CC-100nF
C175 CC.10000K
R108 R-10K/X
R109 R-10K
R110 R-1K
R111 R-1K/X
3P3V
R124 R-0/X
U102
SIP32411DN
CFG = CFG7
VIN1
VOUT1
ON
GND
GND_PAD
[8] EN_ETH_PWR
R9 R-10K
R107 R-0/X
CN2
TRJG16314CNL
CFG = CFG7
VCC
GND
LEDG_A
LEDG_C
TRD0+
TRD0-
TRD1+
TRD1-
TDR2+
TDR2-
TDR3+
TDR3-
SHIELD
SHIELD
LEDY_A
LEDY_C
D3
D4
D1
D2
R112 R-0
Schematic Title
UDOO BOARD
Created By
UDOO TEAM
Size A3
Page Name
i.MX6Q - RGMII/ETH PHY
Rev D
Date: Monday, August 05, 2013
Sheet 8 of 17

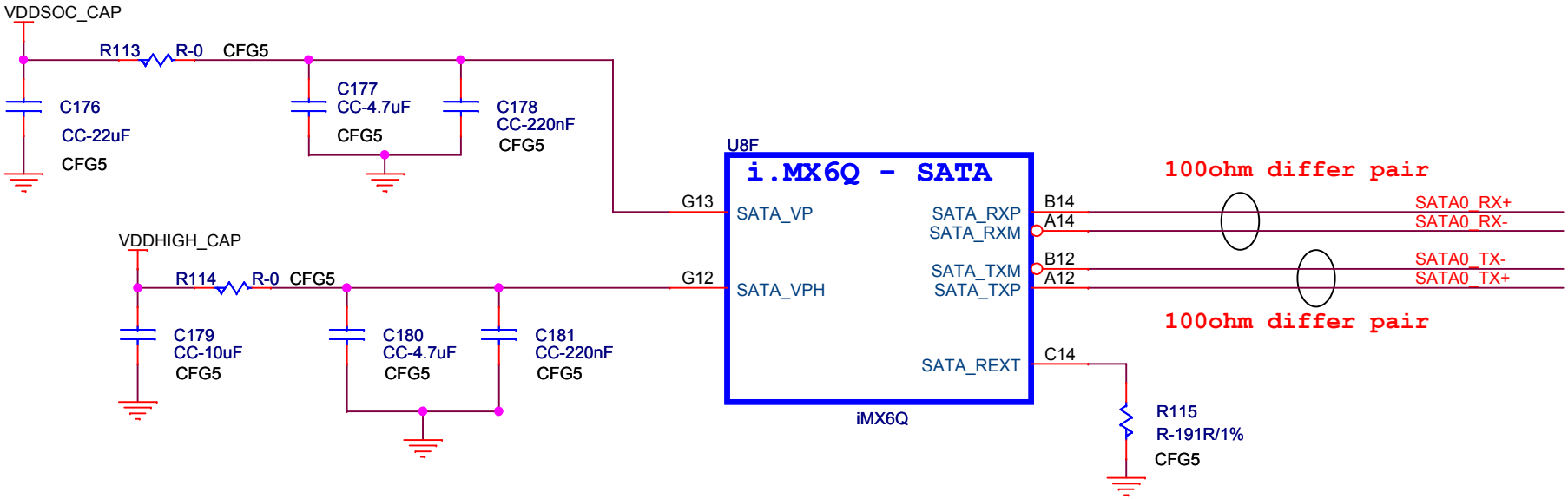

SATA

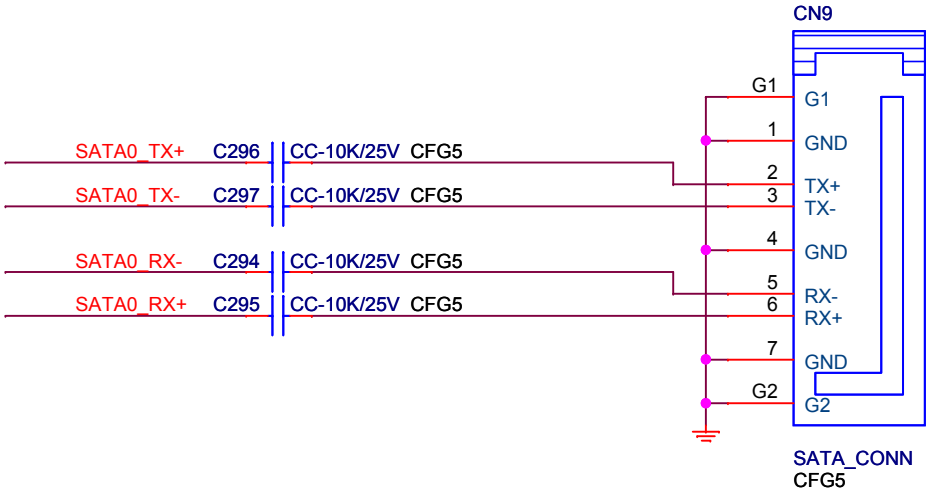

SATA PW

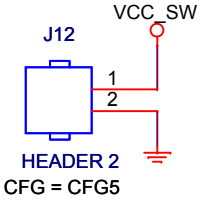

Schematic Title: UDOO BOARD		Created By: UDOO TEAM
Size: A	Page Name: SATA CONNECTOR	Rev: D
Date: Monday, August 05, 2013	Sheet 9 of 17	

USB - HOST

USB HUB Controller (4 Port USB).

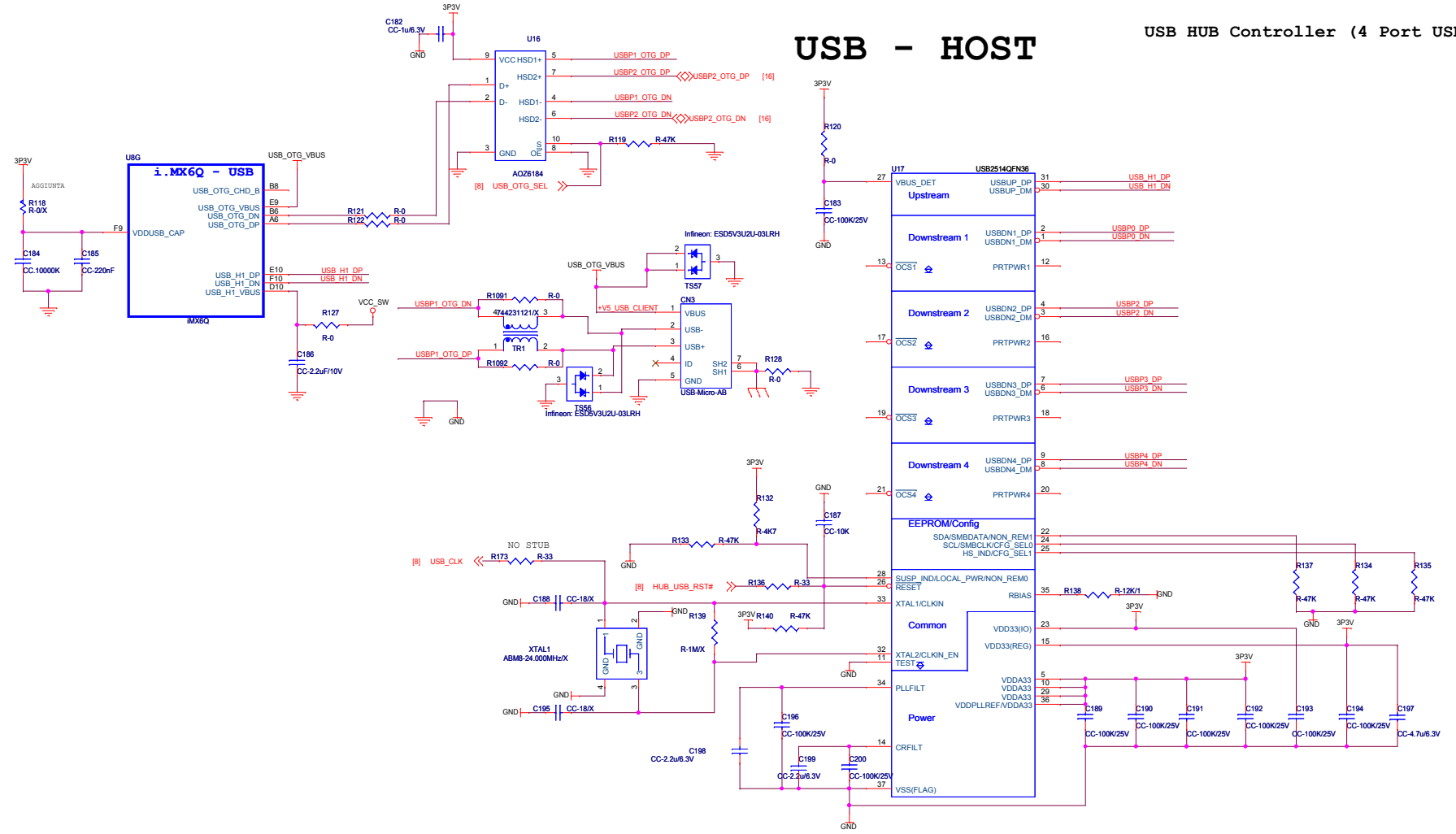

USB - OTG

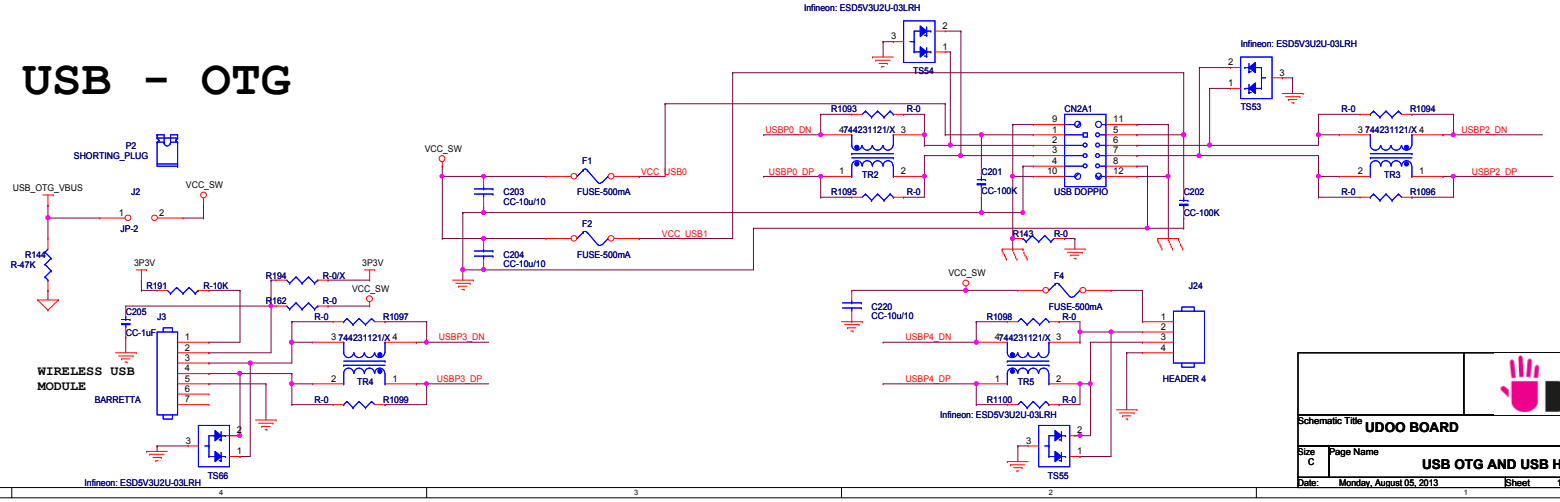

Schematic Title: UDOO BOARD		Created By: UDOO TEAM
Size: C	Page Name: USB OTG AND USB HUB	Rev: D
Date: Monday, August 05, 2013	Sheet 10 of 17	

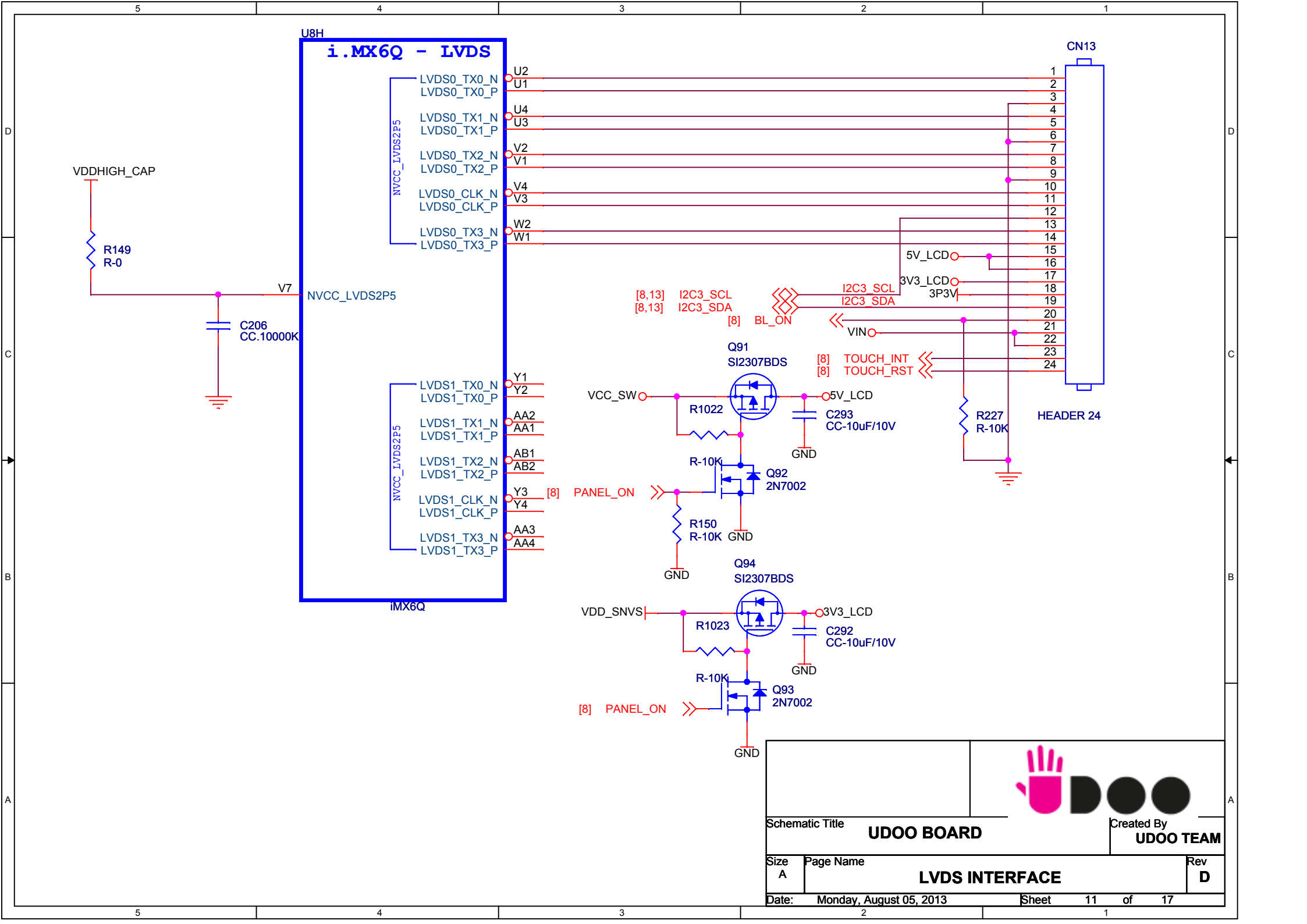

Schematic Title: UDOO BOARD		Created By: UDOO TEAM
Size: A	Page Name: LVDS INTERFACE	Rev: D
Date: Monday, August 05, 2013	Sheet 11 of 17	

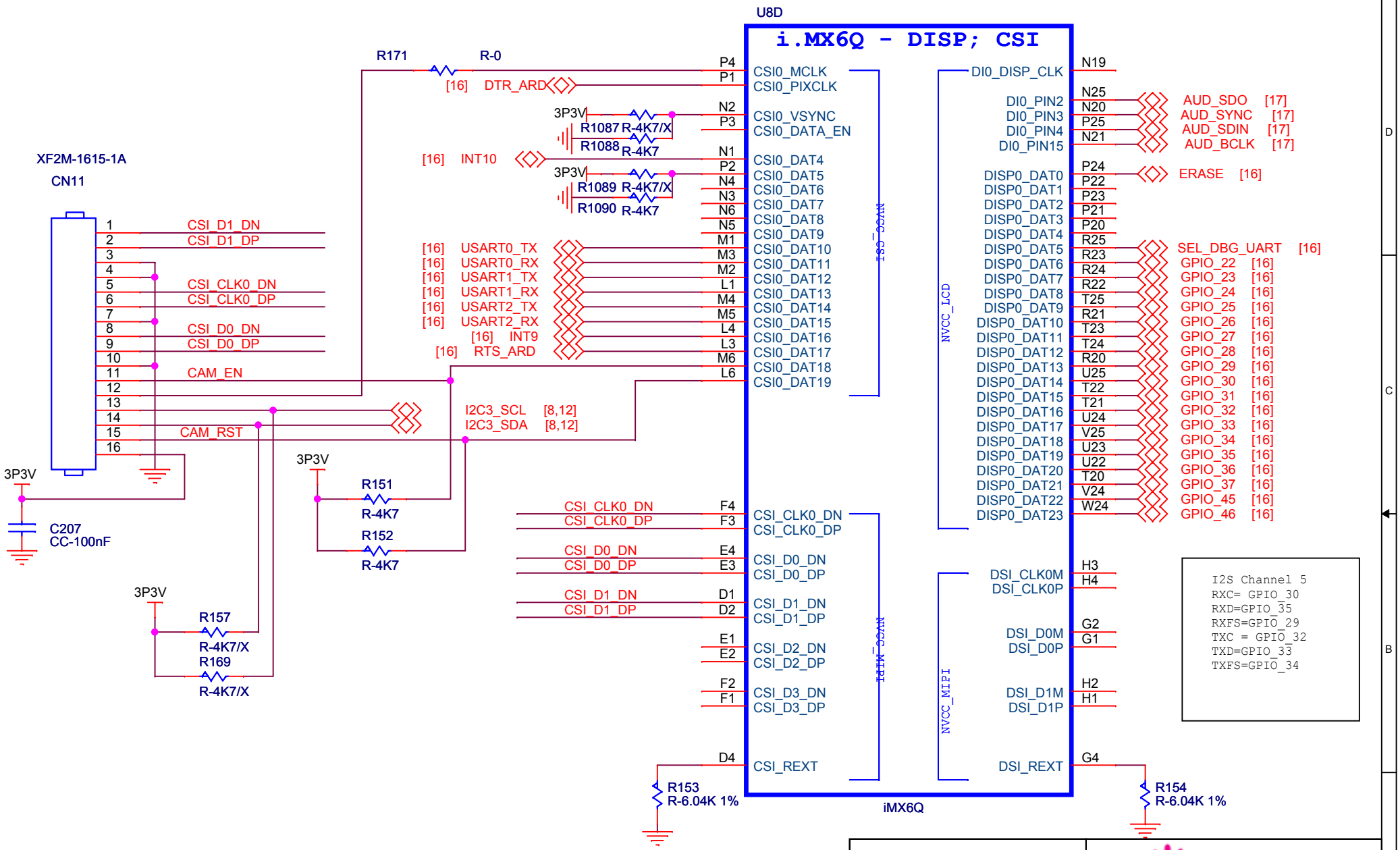
U8D
i.MX6Q - DISP; CSI
iMX6Q
XF2M-1615-1A
CN11
R171 R-0
[16] DTR_ARD
3P3V
R1087 R-4K7/X
R1088 R-4K7
[16] INT10
R1089 R-4K7/X
R1090 R-4K7
[16] USART0_TX
[16] USART0_RX
[16] USART1_TX
[16] USART1_RX
[16] USART2_TX
[16] USART2_RX
[16] INT9
[16] RTS_ARD
I2C3_SCL [8,12]
I2C3_SDA [8,12]
CAM_EN
CAM_RST
CSI_D1_DN
CSI_D1_DP
CSI_CLK0_DN
CSI_CLK0_DP
CSI_D0_DN
CSI_D0_DP
C207
CC-100nF
R151
R-4K7
R152
R-4K7
R157
R-4K7/X
R169
R-4K7/X
CSI0_MCLK
CSI0_PIXCLK
CSI0_VSYNC
CSI0_DATA_EN
CSI0_DAT4
CSI0_DAT5
CSI0_DAT6
CSI0_DAT7
CSI0_DAT8
CSI0_DAT9
CSI0_DAT10
CSI0_DAT11
CSI0_DAT12
CSI0_DAT13
CSI0_DAT14
CSI0_DAT15
CSI0_DAT16
CSI0_DAT17
CSI0_DAT18
CSI0_DAT19
NVCC_CSI
CSI_CLK0_DN
CSI_CLK0_DP
CSI_D0_DN
CSI_D0_DP
CSI_D1_DN
CSI_D1_DP
CSI_D2_DN
CSI_D2_DP
CSI_D3_DN
CSI_D3_DP
CSI_REXT
NVCC_MIPI
R153
R-6.04K 1%
DI0_DISP_CLK
DI0_PIN2
DI0_PIN3
DI0_PIN4
DI0_PIN15
DISP0_DAT0
DISP0_DAT1
DISP0_DAT2
DISP0_DAT3
DISP0_DAT4
DISP0_DAT5
DISP0_DAT6
DISP0_DAT7
DISP0_DAT8
DISP0_DAT9
DISP0_DAT10
DISP0_DAT11
DISP0_DAT12
DISP0_DAT13
DISP0_DAT14
DISP0_DAT15
DISP0_DAT16
DISP0_DAT17
DISP0_DAT18
DISP0_DAT19
DISP0_DAT20
DISP0_DAT21
DISP0_DAT22
DISP0_DAT23
NVCC_LCD
AUD_SDO [17]
AUD_SYNC [17]
AUD_SDIN [17]
AUD_BCLK [17]
ERASE [16]
SEL_DBG_UART [16]
GPIO_22 [16]
GPIO_23 [16]
GPIO_24 [16]
GPIO_25 [16]
GPIO_26 [16]
GPIO_27 [16]
GPIO_28 [16]
GPIO_29 [16]
GPIO_30 [16]
GPIO_31 [16]
GPIO_32 [16]
GPIO_33 [16]
GPIO_34 [16]
GPIO_35 [16]
GPIO_36 [16]
GPIO_37 [16]
GPIO_45 [16]
GPIO_46 [16]
DSI_CLK0M
DSI_CLK0P
DSI_D0M
DSI_D0P
DSI_D1M
DSI_D1P
DSI_REXT
R154
R-6.04K 1%
I2S Channel 5
RXC= GPIO_30
RXD=GPIO_35
RXFS=GPIO_29
TXC = GPIO_32
TXD=GPIO_33
TXFS=GPIO_34
Schematic Title
UDOO BOARD
Created By
UDOO TEAM
Size
A
Page Name
i.MX6Q - CSI INTERFACE
Rev
D
Date: Monday, August 05, 2013
Sheet 12 of 17

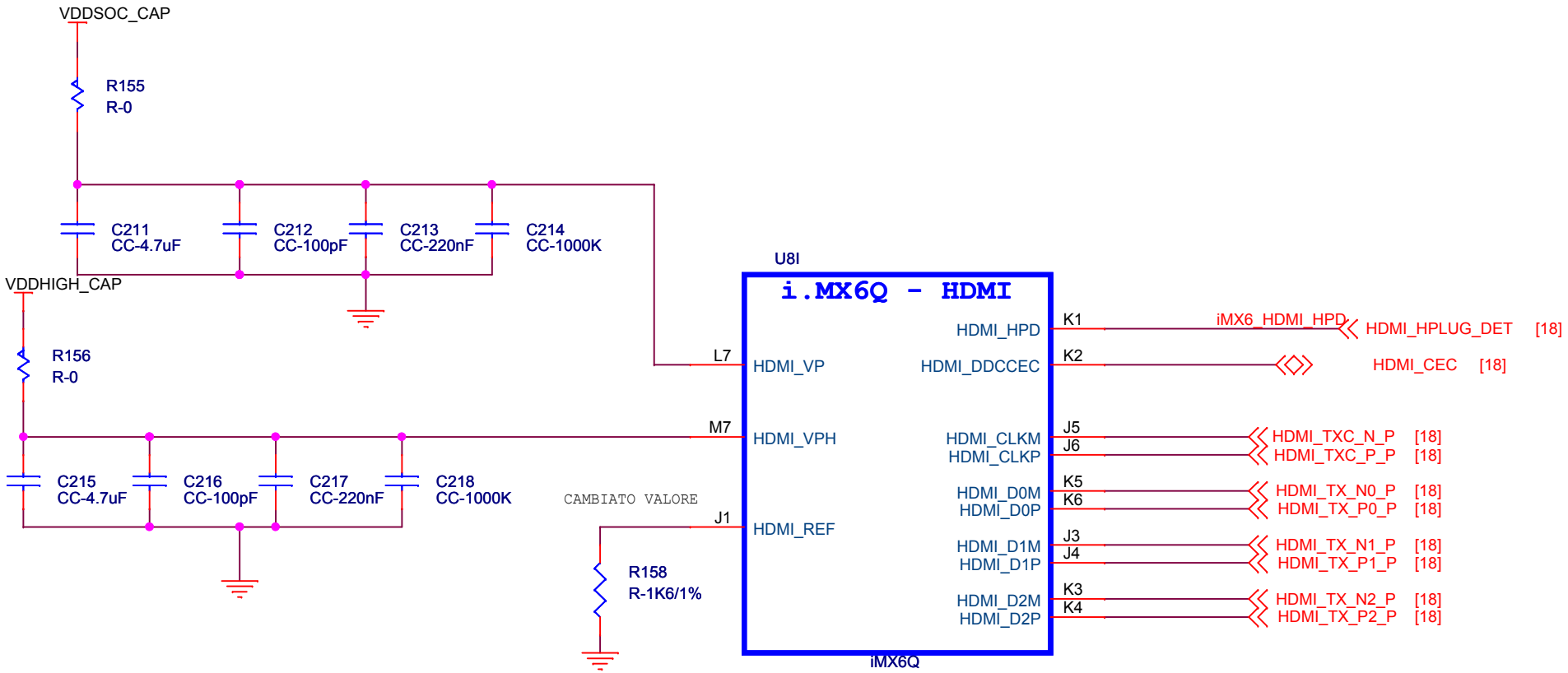

Schematic Title: **UDOO BOARD**		Created By: **UDOO TEAM**
Size: A	Page Name: **i.MX6Q - HDMI INTERFACE**	Rev: **D**
Date: Monday, August 05, 2013	Sheet 13 of 17	

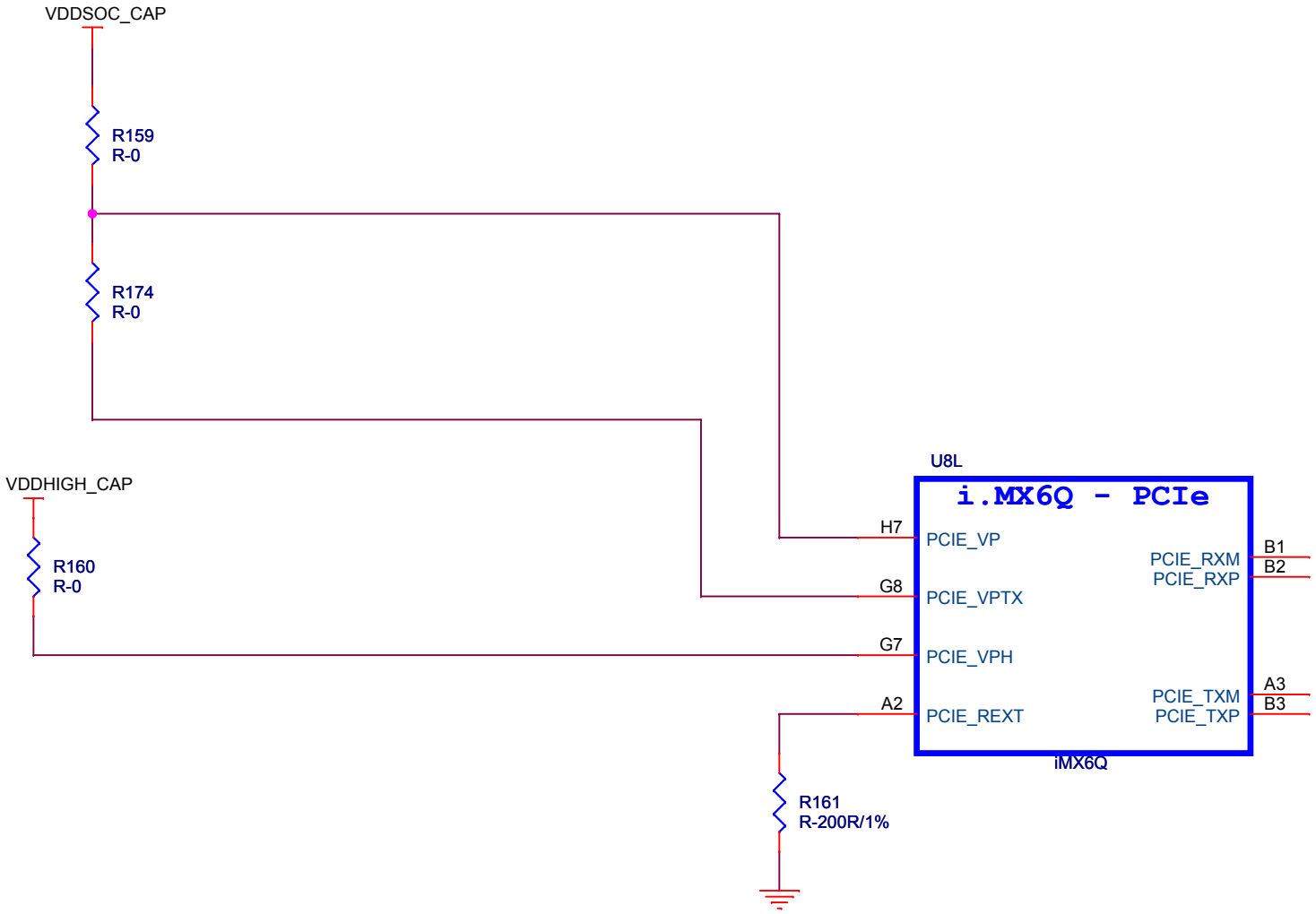

Schematic Title: UDOO BOARD		Created By: UDOO TEAM
Size: A	Page Name: i.MX6Q - PCIe NOT CONNECTED	Rev: D
Date: Monday, August 05, 2013	Sheet 14 of 17	

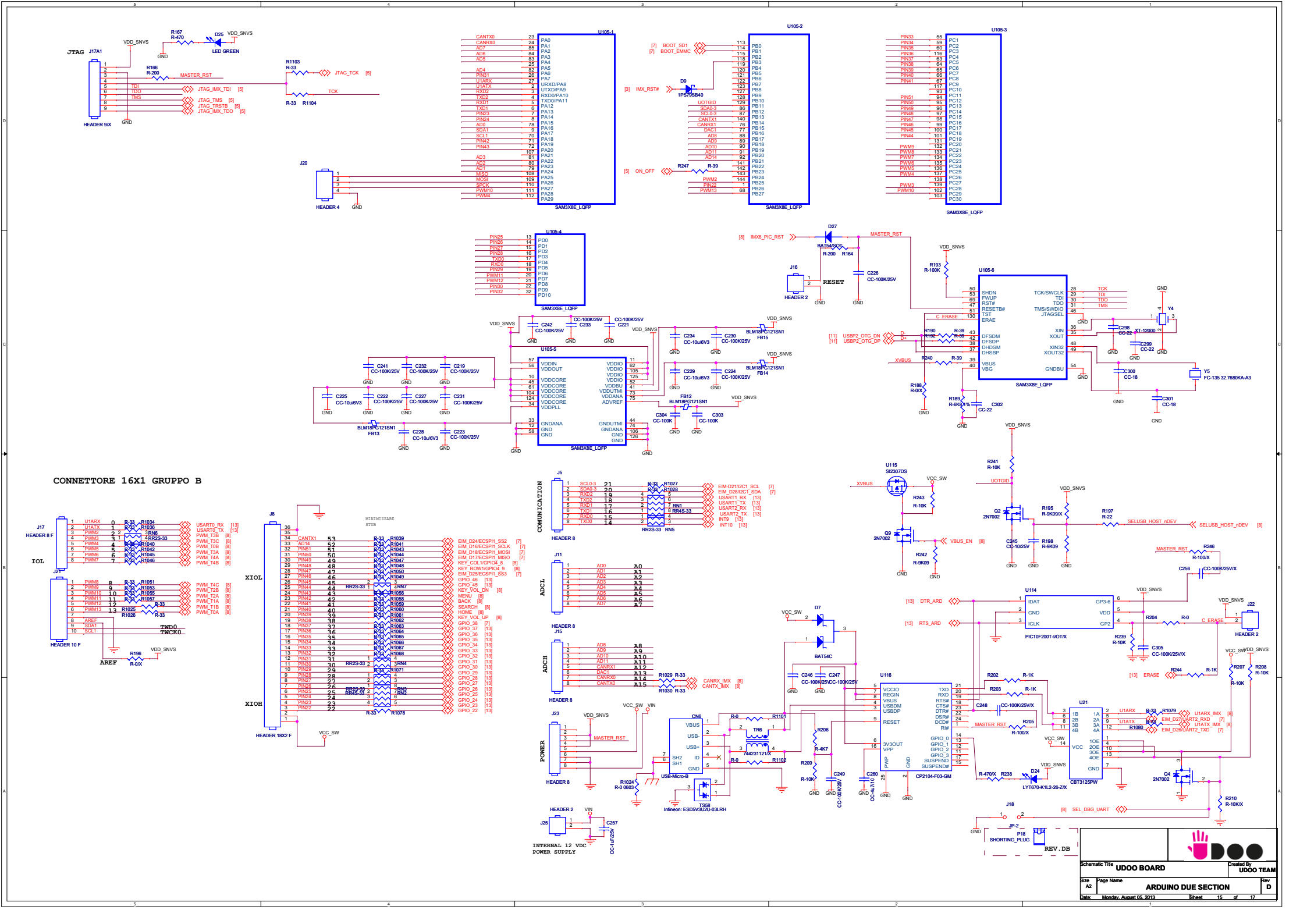

CONNETTORE 16X1 GRUPPO B
JTAG
HEADER 9/X
LED GREEN
SAM3X8E_LQFP
HEADER 4
HEADER 2
RESET
HEADER 8 F
IOL
HEADER 10 F
AREF
XIOL
XIOH
HEADER 18X2 F
MINIMIZZARE STUB
COMUNICATION
ADCL
ADCH
POWER
INTERNAL 12 VDC POWER SUPPLY
USB-Micro-B
Infineon: ESD5V3U2U-03LRH
CP2104-F03-GM
CBT3125PW
PIC10F200T-I/OT/X
SHORTING_PLUG
REV.DB
Schematic Title
UDOO BOARD
Created By
UDOO TEAM
Size
A2
Page Name
ARDUINO DUE SECTION
Rev
D
Date: Monday, August 05, 2013
Sheet 15 of 17

AC'97 AUDIO CODEC

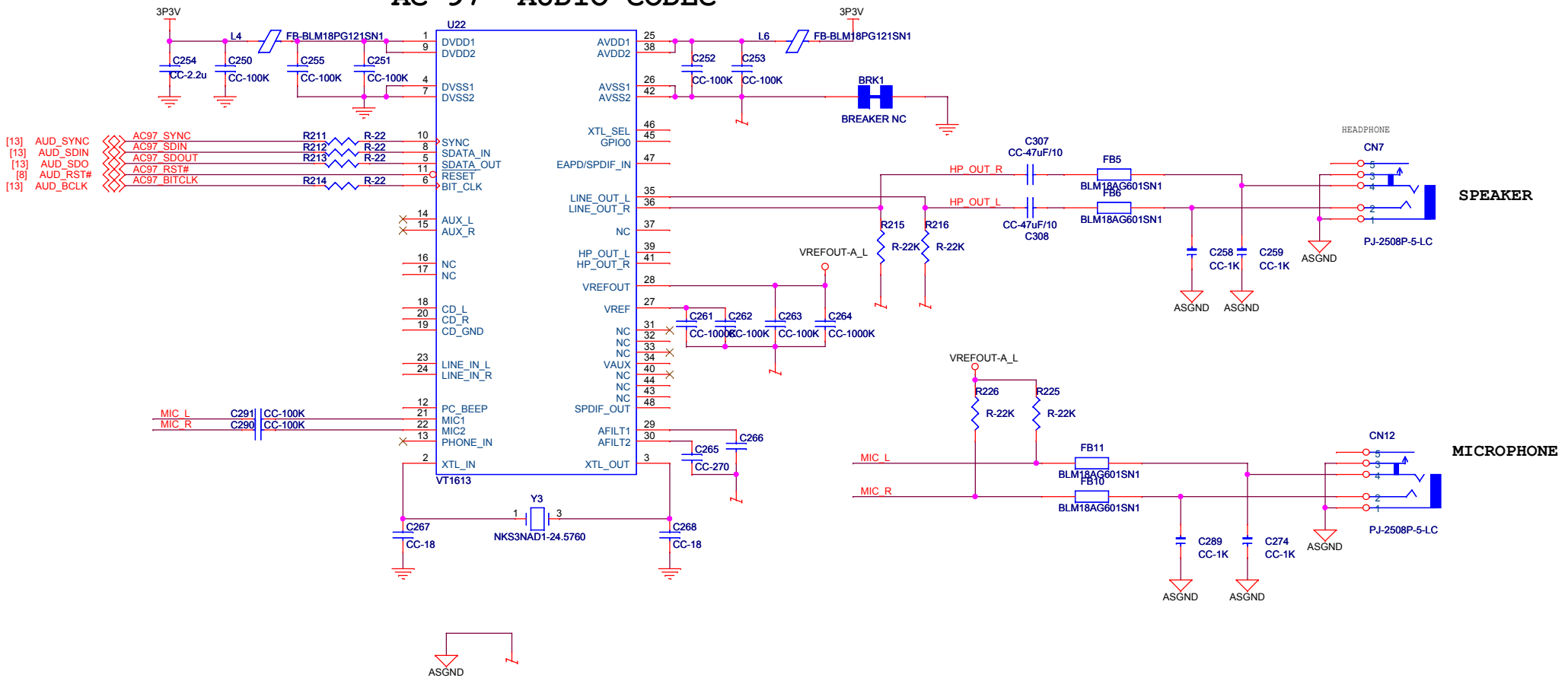

Schematic Title	UDOO BOARD
Created By	UDOO TEAM
Size	B
Page Name	AUDIO CODEC
Rev	D
Date:	Monday, August 05, 2013
Sheet	16 of 17

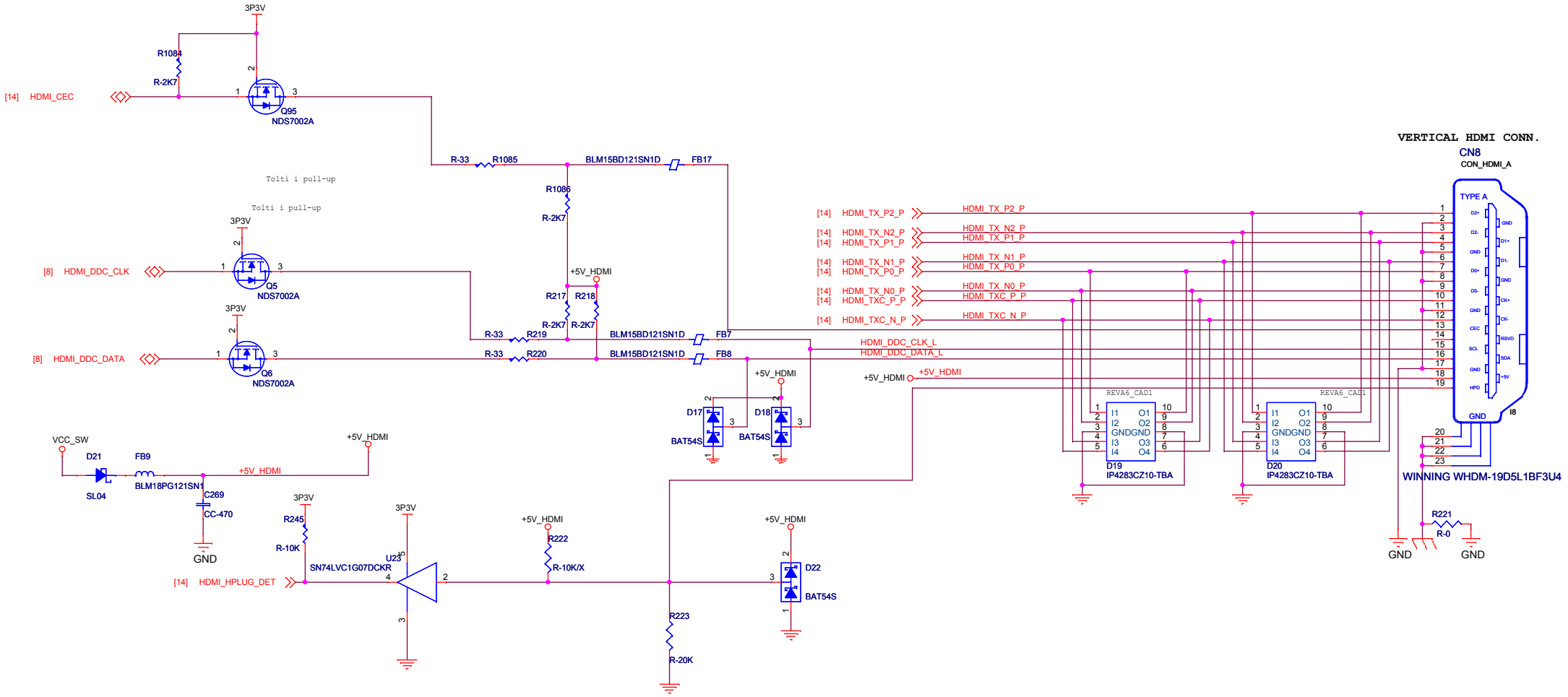

Schematic Title: UDOO BOARD		Created By: UDOO TEAM
Size: A3	Page Name: HDMI CONNECTOR	Rev: D
Date: Monday, August 05, 2013	Sheet 17 of 17	