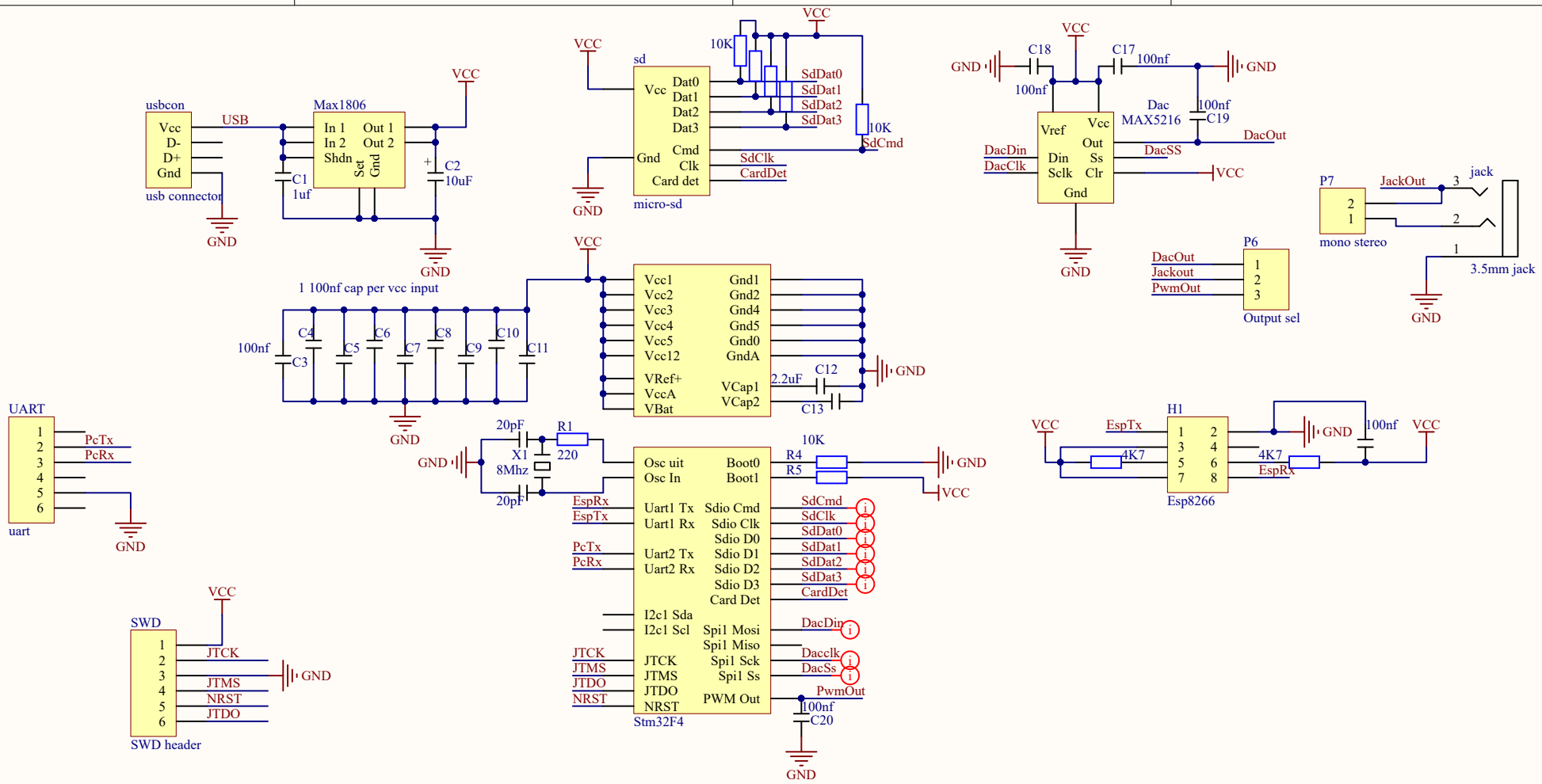

Title		
Size A4	Number	Revision
Date: 16/05/2016	Sheet of	
File: C:\Users\..\schema.SchDoc	Drawn By:	