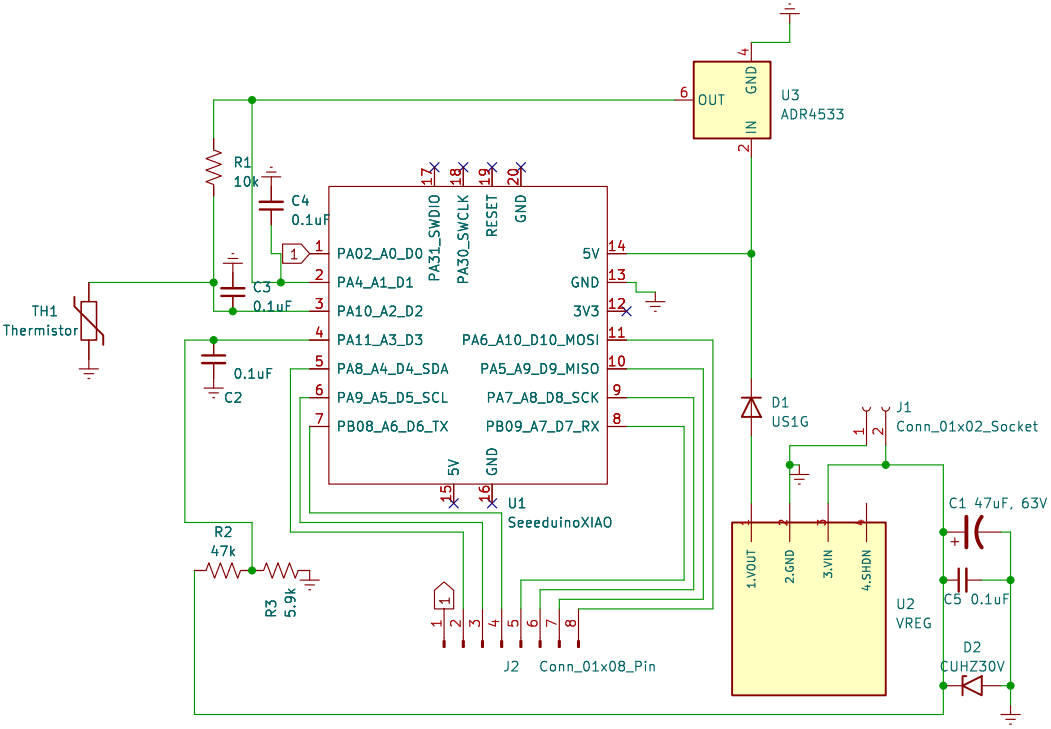

By Jacob Tomczeszyn

HCRL, UT Austin

Sheet: /

File: BumpyBotBatteryMonitorkicad_pro.kicad_sch

Title: BumpyBot Battery Monitor

Size: User	Date: 2023-08-03	**Rev: 2**
KiCad E.D.A. kicad 7.0.2-0		Id: 1/1