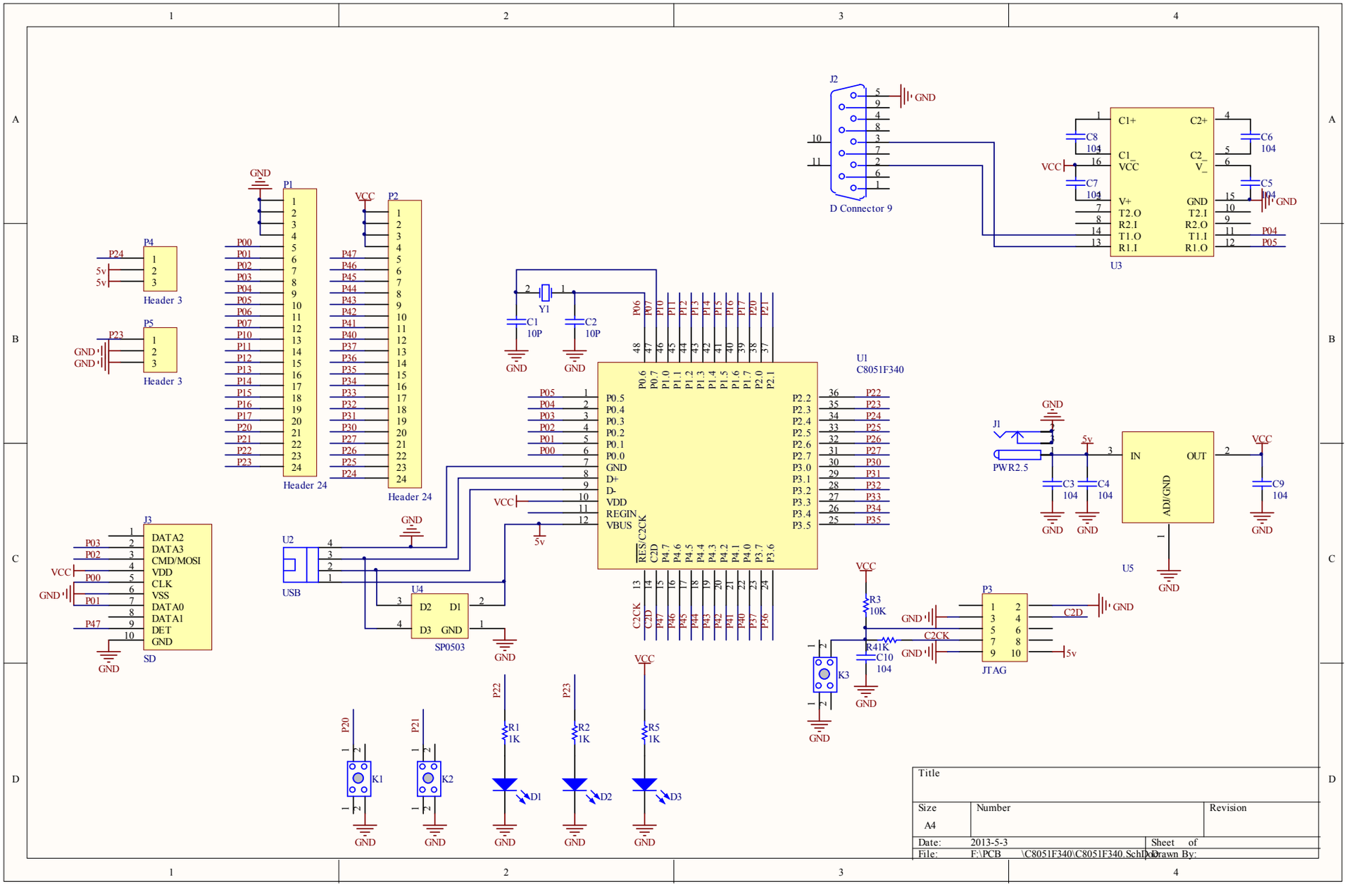

Title		
Size A4	Number	Revision
Date: 2013-5-3	Sheet of	
File: F:\PCB \C8051F340\C8051F340.SchDoc	Drawn By:	