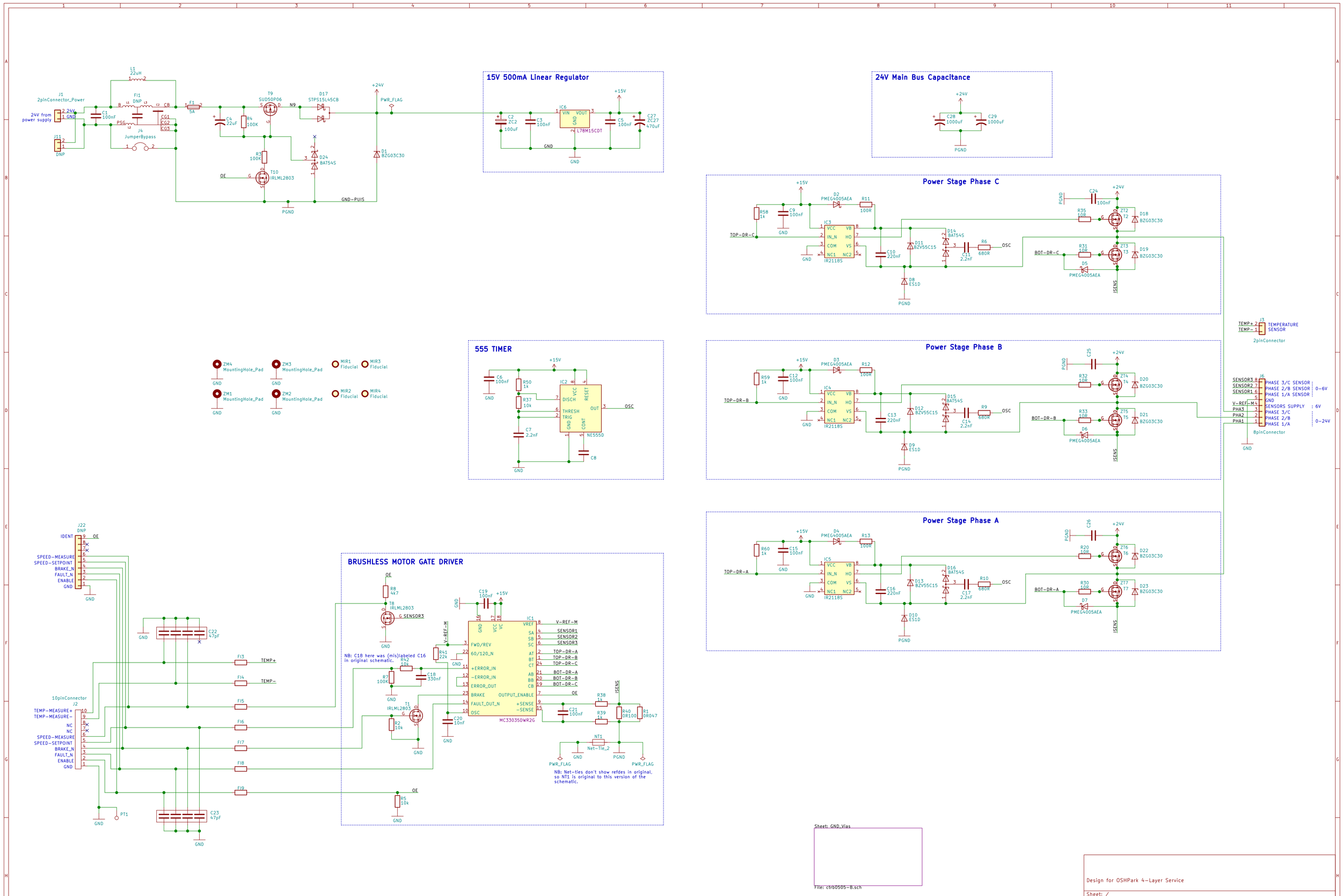
15V 500mA Linear Regulator
24V Main Bus Capacitance
Power Stage Phase C
Power Stage Phase B
Power Stage Phase A
555 TIMER
BRUSHLESS MOTOR GATE DRIVER
NB: C18 here was (mis)labeled C16 in original schematic.
NB: Net-ties don't show refdes in original, so NT1 is original to this version of the schematic.
24V from power supply
J1
2pinConnector_Power
J4
JumperBypass
J11
DNP
J22
DNP
10pinConnector
J2
J3
TEMPERATURE SENSOR
2pinConnector
J6
8pinConnector
PHASE 3/C SENSOR
PHASE 2/B SENSOR
PHASE 1/A SENSOR
SENSORS SUPPLY
PHASE 3/C
PHASE 2/B
PHASE 1/A
0-6V
6V
0-24V
MC33035DWR2G
IR2118S
NE555D
L78M15CDT
IRLML2803
IRLML2803
SUD50P06
STPS15L45CB
BZG03C30
PMEG4005AEA
BAT54S
BZV55C15
ES1D
Sheet: GND_Vias
File: ctrb0505-B.sch
Design for OSHPark 4-Layer Service
Sheet: /
File: ctrb0505-A.sch
Title:
Size: A2
Date:
Rev: 1
KiCad E.D.A. kicad 5.1.5+dfsg1-2build2
Id: 1/2

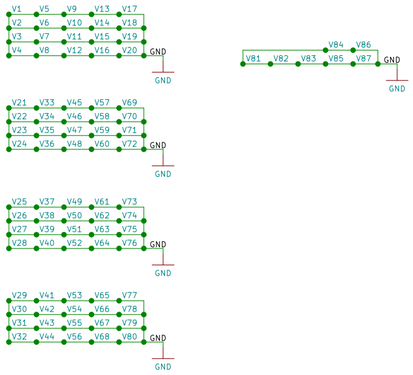

Sheet: /GND_Vias/
File: ctrb0505-B.sch

Title:

Size: A2	Date:	Rev:
KiCad E.D.A. kicad 5.1.5+dfsg1-2build2		Id: 2/2