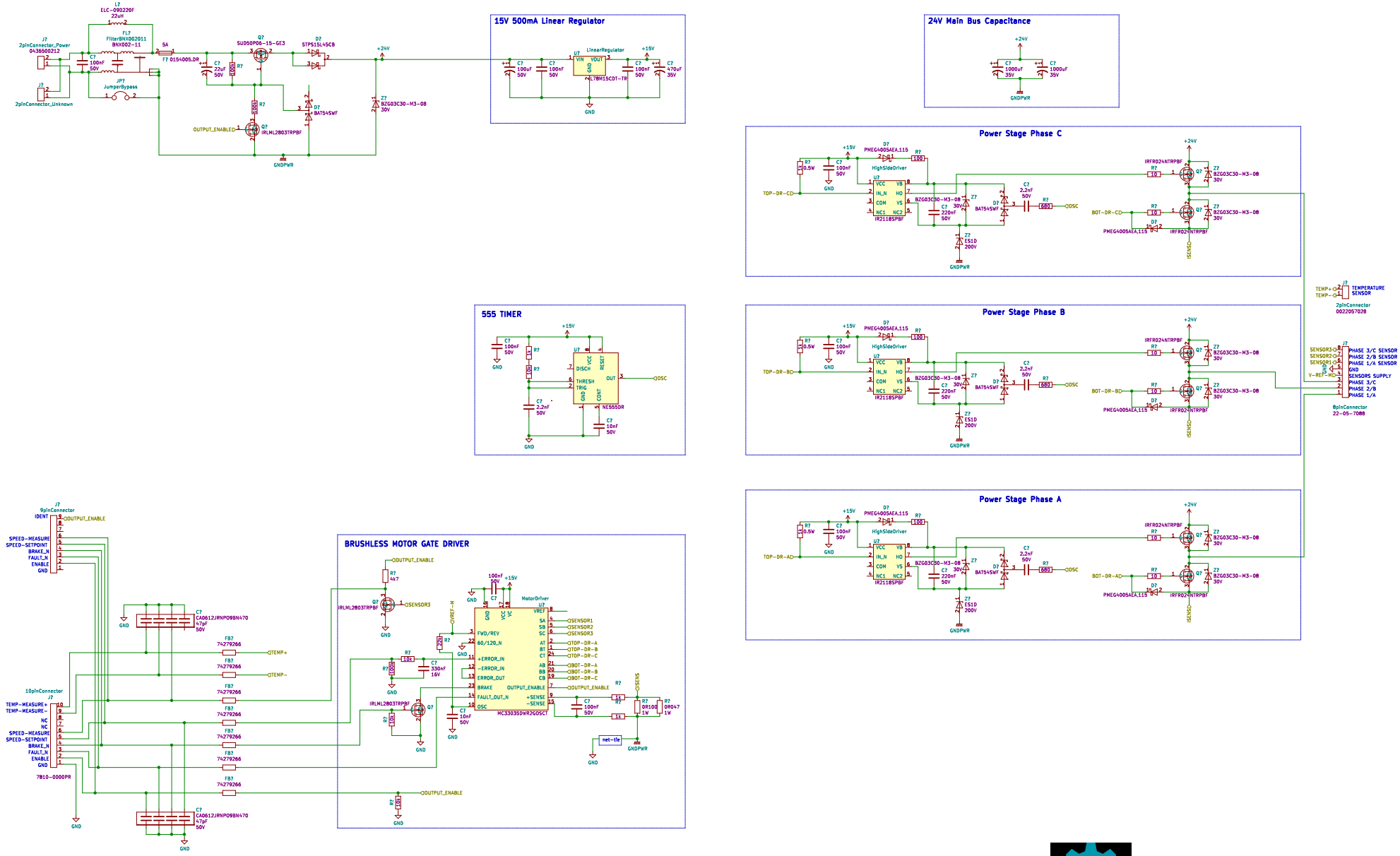

open source hardware

Design for OSHPark 4-Layer Service

Sheet: /
File: 10096315 Blower Driver.sch

Title:

Size: A2	Date:	Rev: 1
KiCad E.D.A. kicad (5.1.5)-3		Id: 1/1