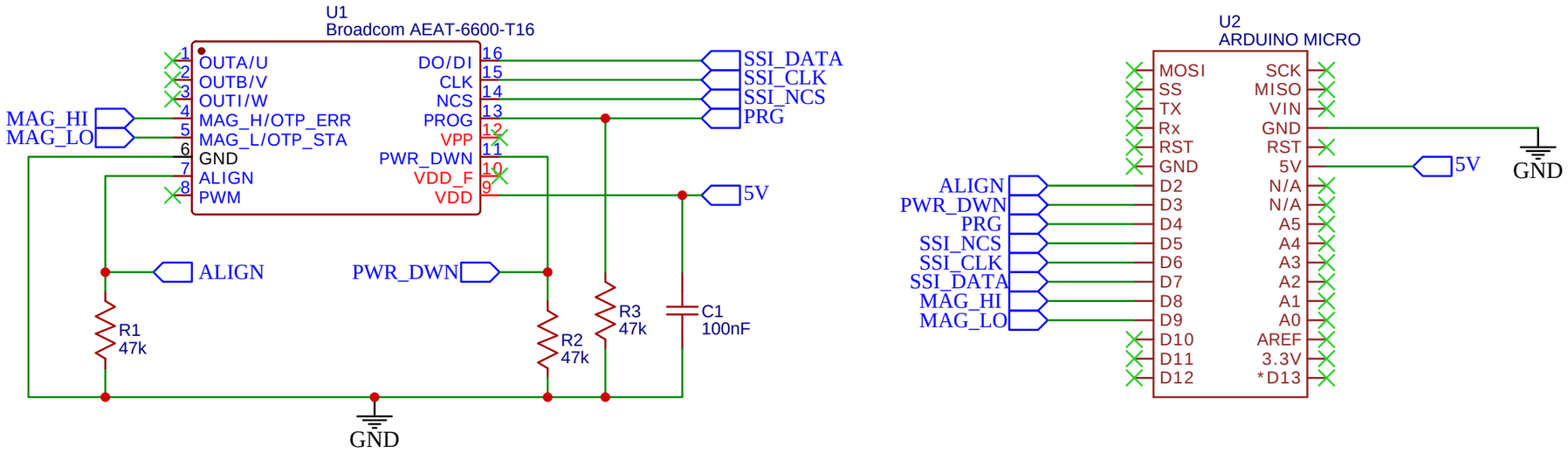

TITLE: AEAT-6600-T16 Test Board		REV: 1.0
EasyEDA	Company: Lightline Technology	Sheet: 1/1
	Date: 2020-12-19 Drawn By: 4nswer	