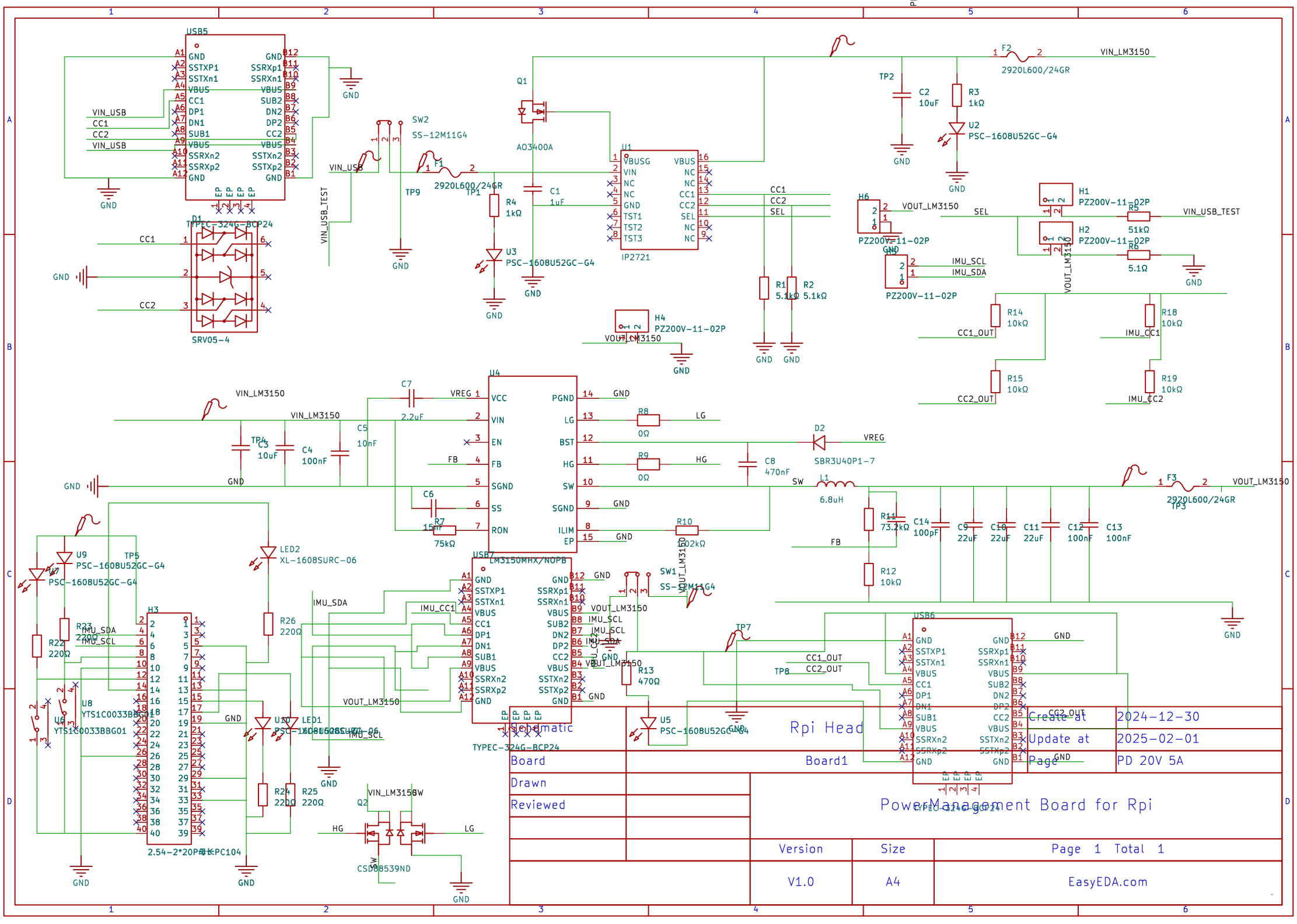
USB5
TYPEC-324G-BCP24
D1
SRV05-4
VIN_USB
CC1
CC2
GND
SW2
SS-12M11G4
F1
2920L600/24GR
TP9
TP1
VIN_USB_TEST
R4
1kΩ
U3
PSC-1608U52GC-G4
Q1
AO3400A
C1
1uF
U1
IP2721
VBUSG
VIN
NC
GND
TST1
TST2
TST3
VBUS
CC1
CC2
SEL
R1
5.1kΩ
R2
5.1kΩ
H4
PZ200V-11-02P
VOUT_LM3150
TP2
C2
10uF
R3
1kΩ
U2
PSC-1608U52GC-G4
F2
2920L600/24GR
VIN_LM3150
H6
PZ200V-11-02P
H5
PZ200V-11-02P
IMU_SCL
IMU_SDA
H1
PZ200V-11-02P
H2
PZ200V-11-02P
R5
51kΩ
R6
5.1Ω
VIN_USB_TEST
R14
10kΩ
R15
10kΩ
R18
10kΩ
R19
10kΩ
CC1_OUT
CC2_OUT
IMU_CC1
IMU_CC2
U4
LM3150MHX/NOPB
VCC
VIN
EN
FB
SGND
SS
RON
PGND
LG
BST
HG
SW
ILIM
EP
C7
2.2uF
C5
10nF
C3
10uF
C4
100nF
TP4
C6
15nF
R7
75kΩ
R8
0Ω
R9
0Ω
R10
102kΩ
C8
470nF
D2
SBR3U40P1-7
VREG
L1
6.8uH
R11
73.2kΩ
R12
10kΩ
C14
100pF
C9
22uF
C10
22uF
C11
22uF
C12
100nF
C13
100nF
F3
2920L600/24GR
TP3
VOUT_LM3150
U9
PSC-1608U52GC-G4
TP5
LED2
XL-1608SURC-06
R23
220Ω
R22
220Ω
U8
YTS1C0033BBG01
U6
YTS1C0033BBG01
H3
2.54-2*20PH-K
PC104
R26
220Ω
U10
PSC-1608U52GC-G4
LED1
XL-1608SURC-06
R24
220Ω
R25
220Ω
USB7
LM3150MHX/NOPB
TYPEC-324G-BCP24
SW1
SS-12M11G4
R13
470Ω
U5
PSC-1608U52GC-G4
TP7
TP8
USB6
TYPEC-324G-BCP24
Q2
CSD88539ND
HG
LG
Schematic
Rpi Head
Board
Board1
Drawn
Reviewed
Create at
2024-12-30
Update at
2025-02-01
Page
PD 20V 5A
PowerManagement Board for Rpi
Version
Size
Page 1 Total 1
V1.0
A4
EasyEDA.com