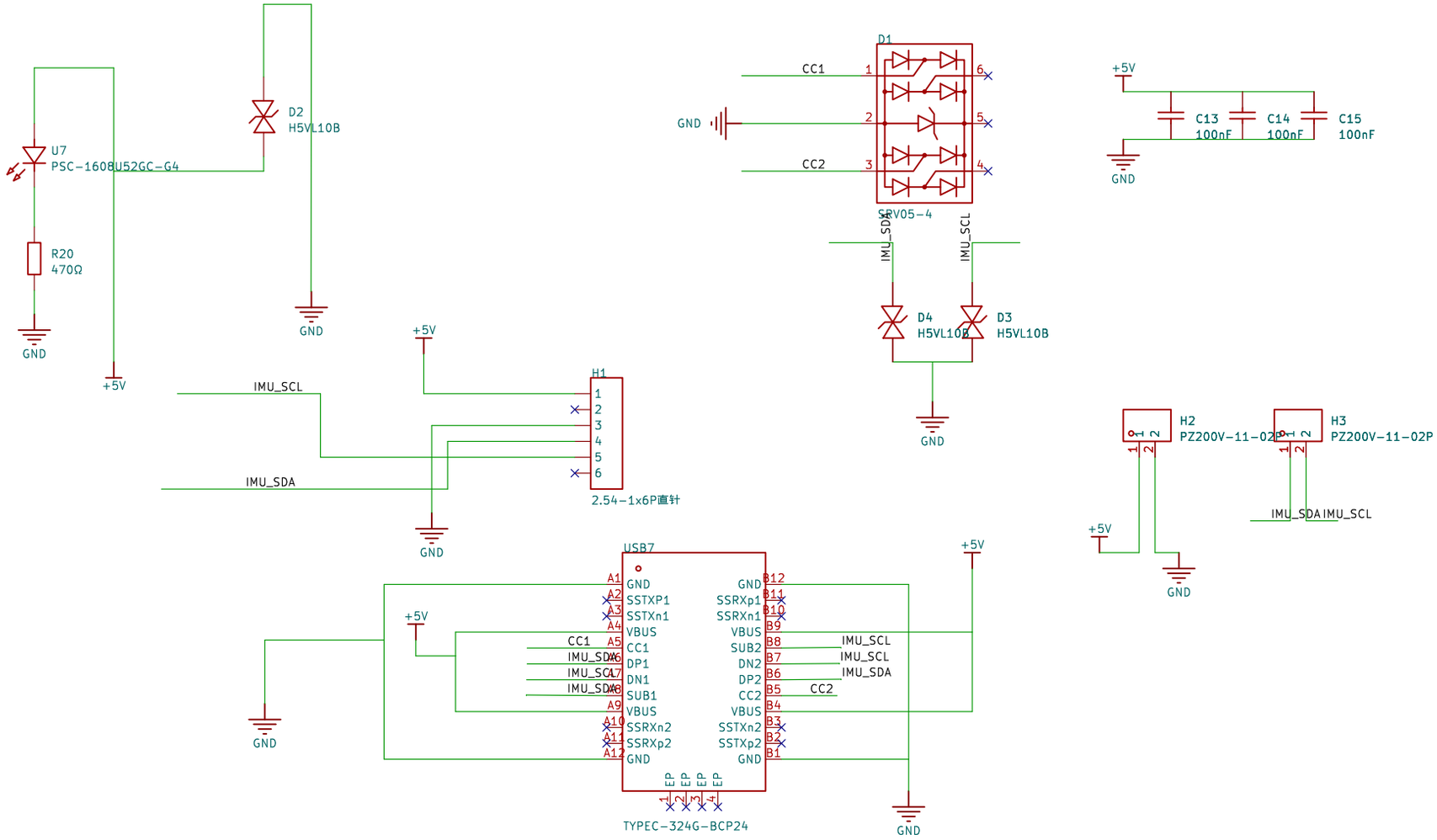

Schematic	IMU Connector	Create at	2025-01-23
		Update at	2025-01-31
Board	Board2	Page	IMU Connector
Drawn		PowerManagement Board for Rpi	
Reviewed			
		Version	Size	Page 1 Total 1
		V1.0	A4	EasyEDA.com