NO-killkey: switch connect KEY to GND for open P-mosfets. V5 or VBUS signal close P-mosfets.
MCU start and check USB_FLAG. For non-usb, they start booster (one short signal to 5V_EN).
Next, MCU listen KEY by BTN1 pin, for power off set 2 short signal to 5V_EN.
Warning! Work only for 1s battery, because VBAT must be lower V5/VBUS

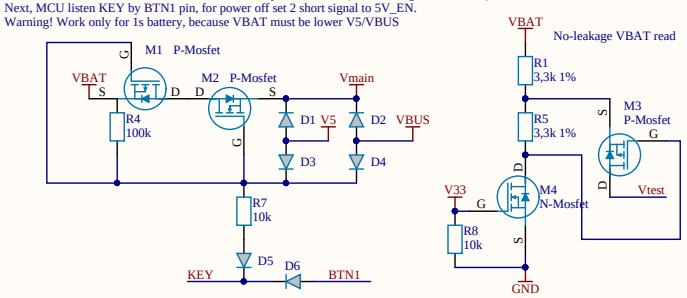

Linear 3,3V + mosfet controlled 3,3V output

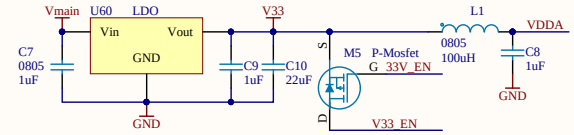

Bat charge 2A (or half 1A), Booster 5V 3A

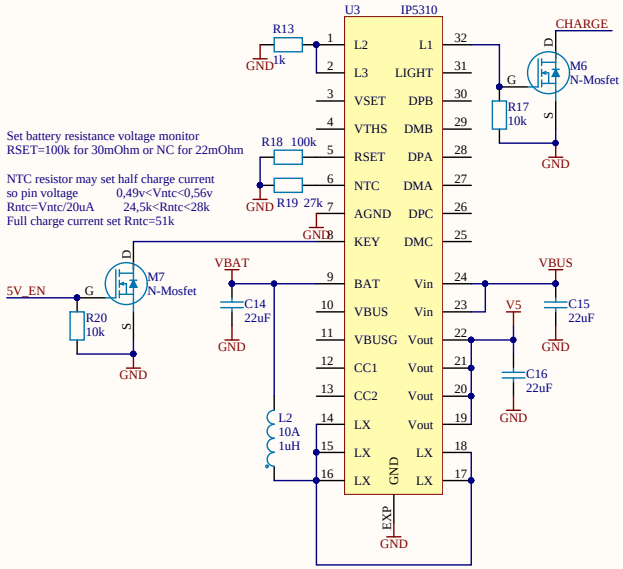

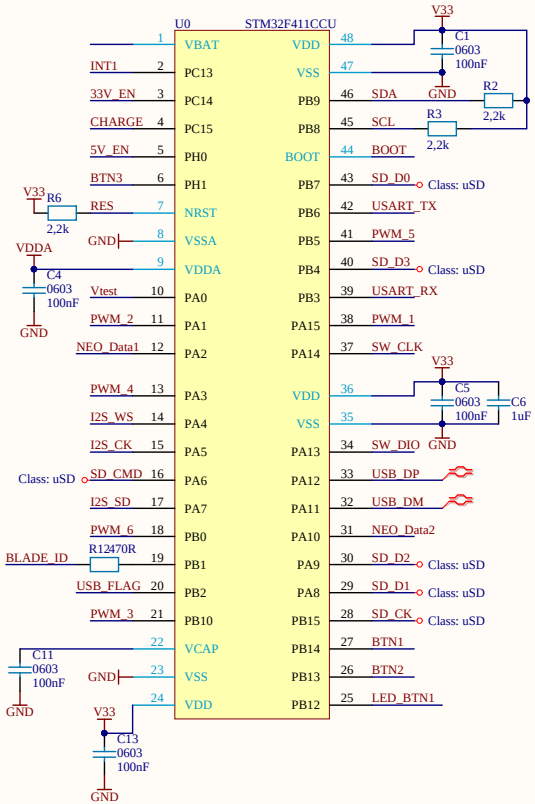

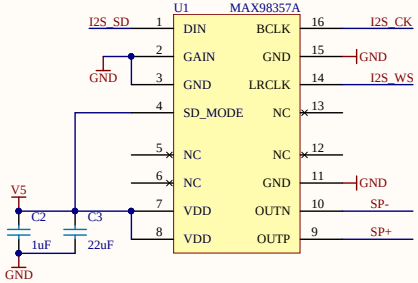

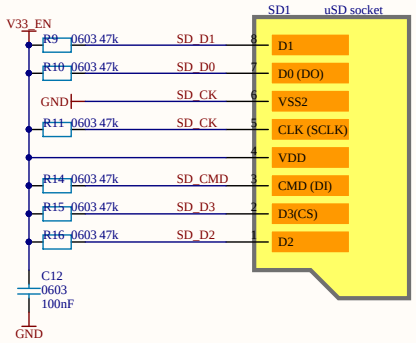

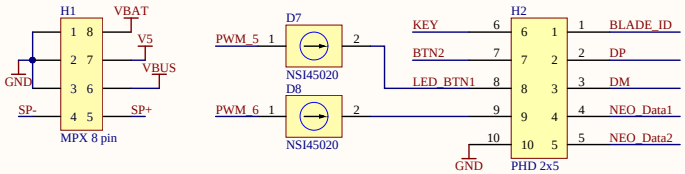

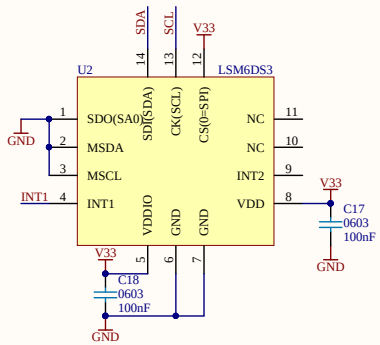

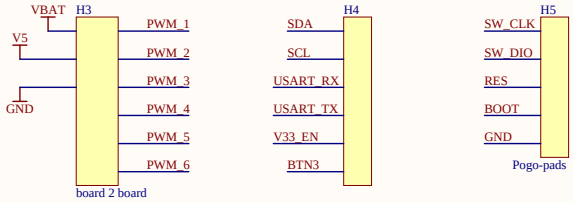

USB detect

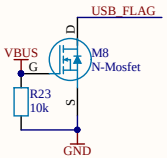

USB line protection

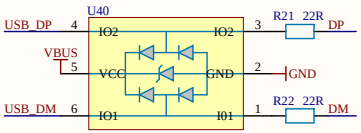

Key_1A