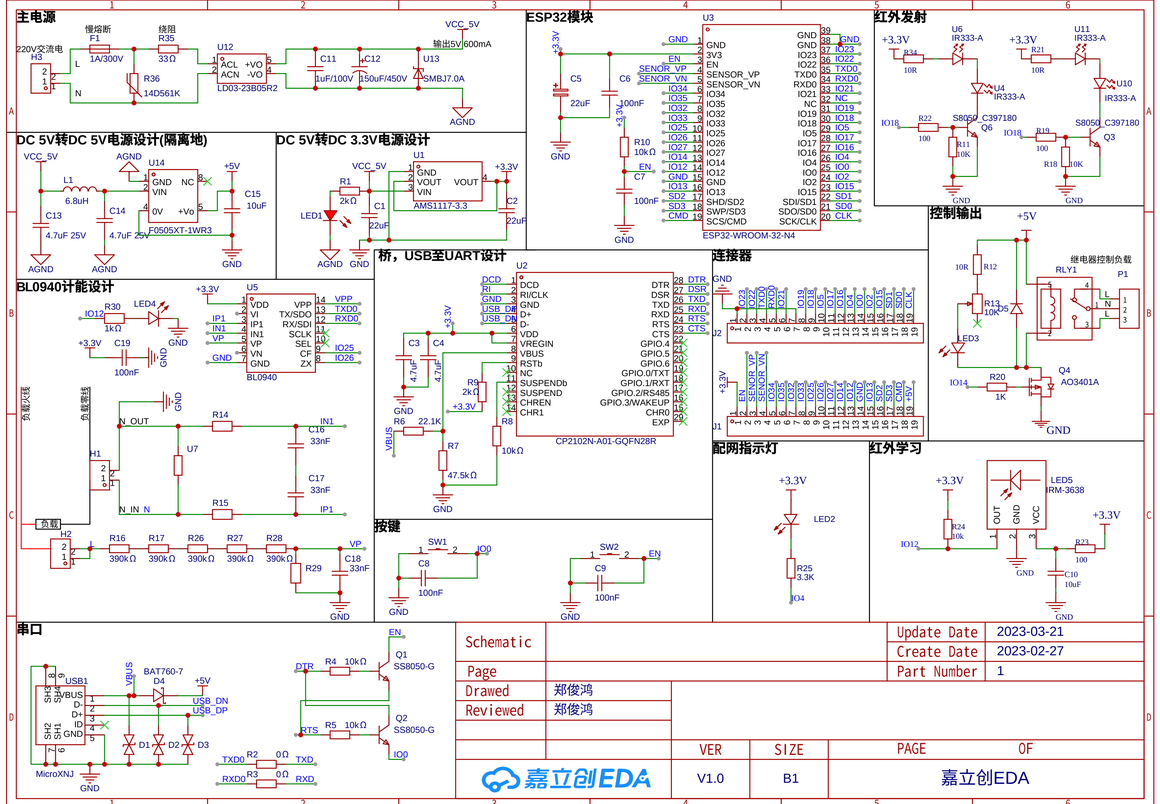

Schematic		Update Date	2023-03-21
		Create Date	2023-02-27
Page		Part Number	1
Drawed	郑俊鸿		
Reviewed	郑俊鸿		

VER	SIZE	PAGE	OF
V1.0	B1	嘉立创EDA	

嘉立创EDA

Sheet-Symbol_A4

Sheet-Symbol_A4