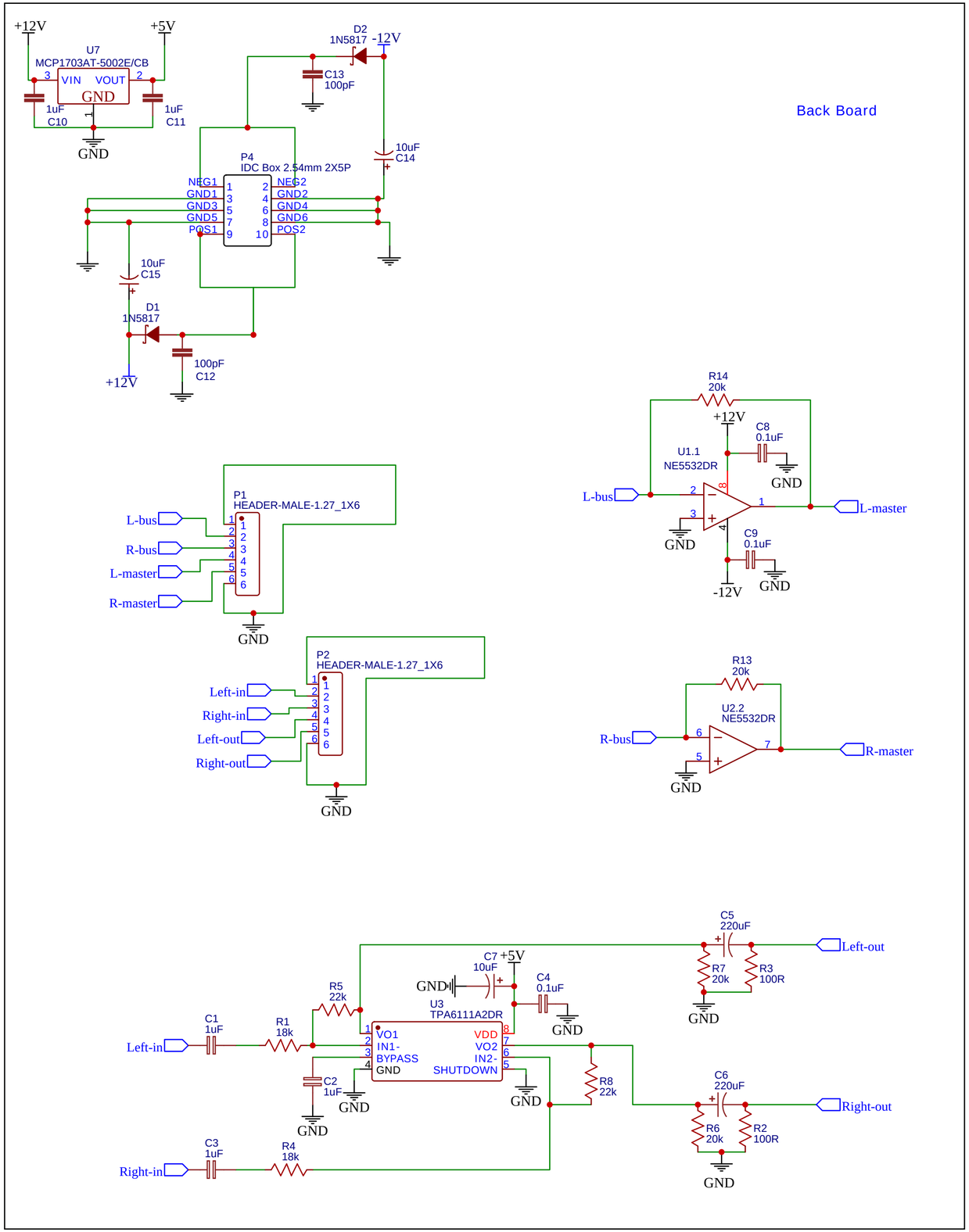

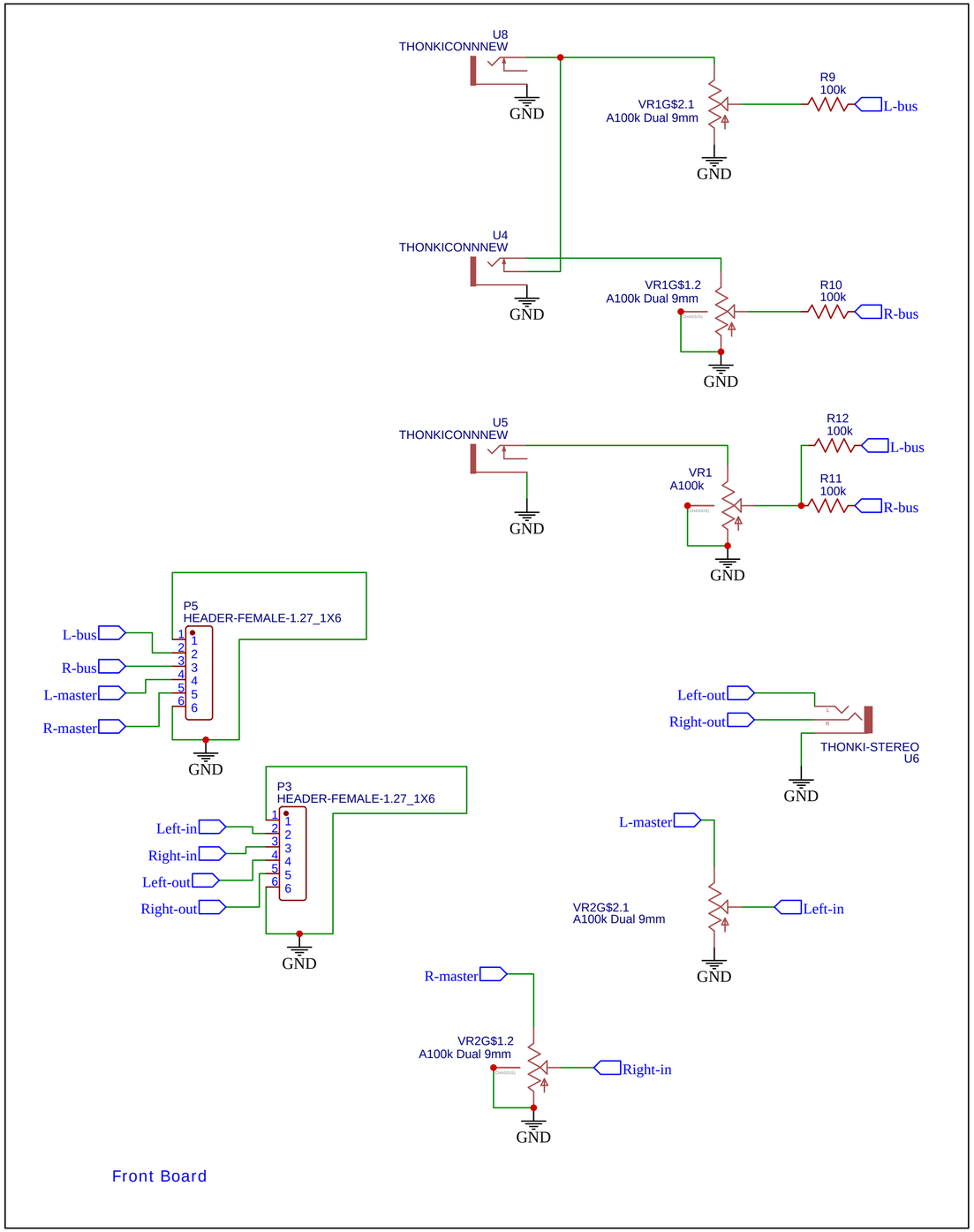

TITLE: 2hp Stereo Mixer		REV: 1.0
EasyEDA	Company: Your Company	Sheet: 1/1
	Date: 2020-08-21 Drawn By: rossgrady	