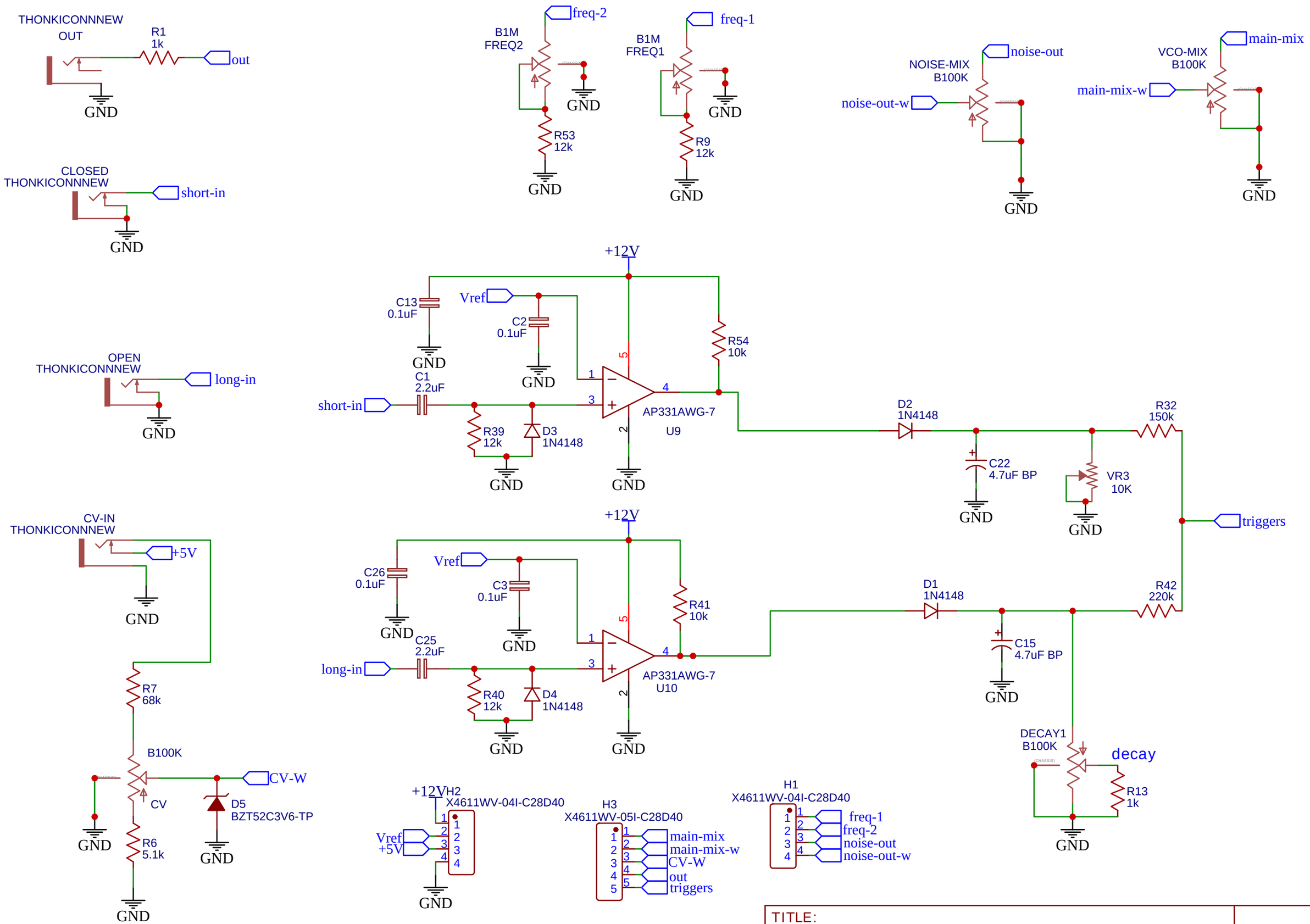

TITLE: baud front	REV: 2.1
EasyEDA	Company: 508: Loop Detected
	Sheet: 1/1
	Date: 2022-12-28 Drawn By: rossgrady