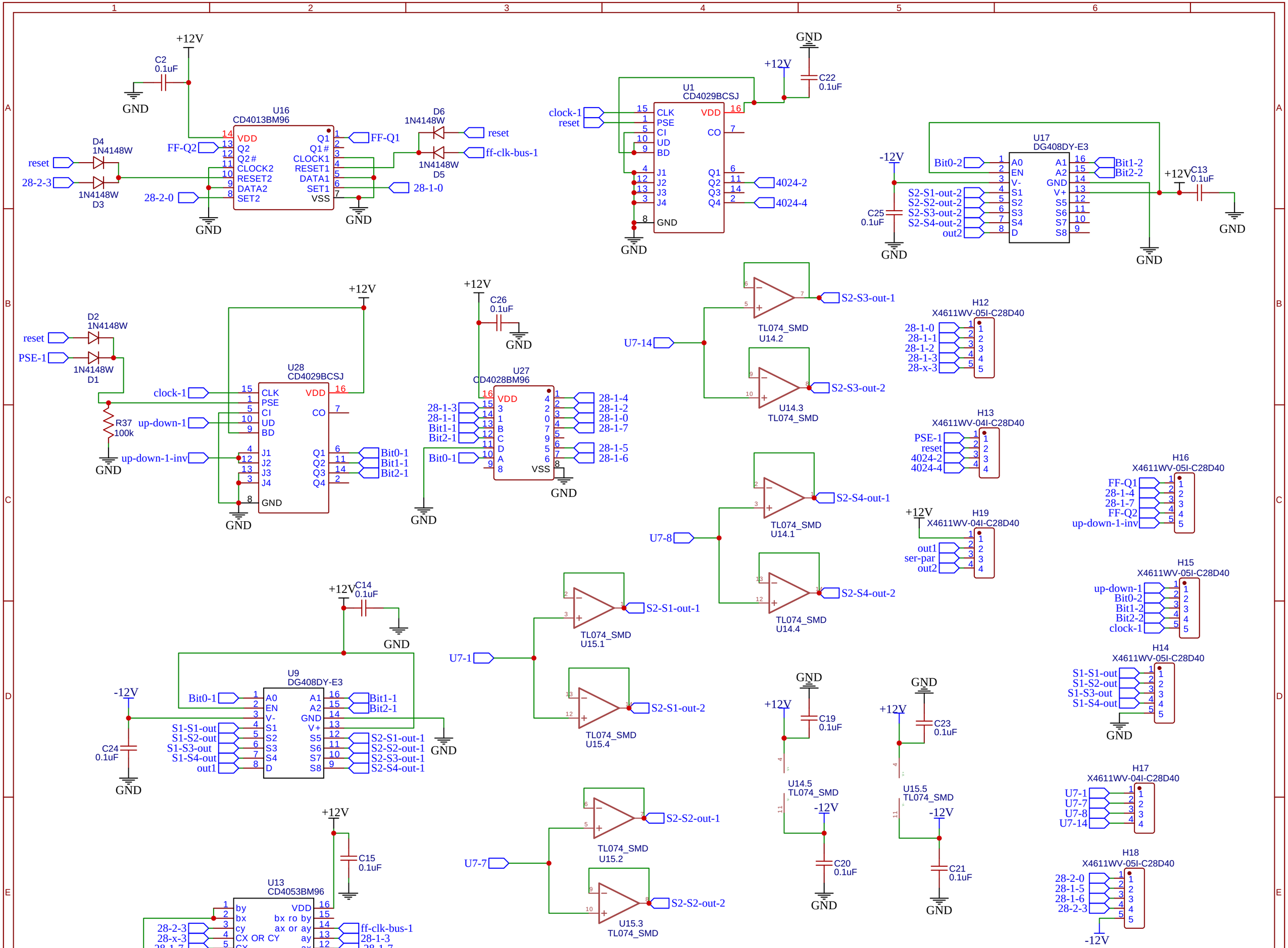


TITLE: four + four back

REV: 2.0

Company: 508: Loop Detected

Sheet: 1/1

Date: 2023-11-05

Drawn By: rossgrady