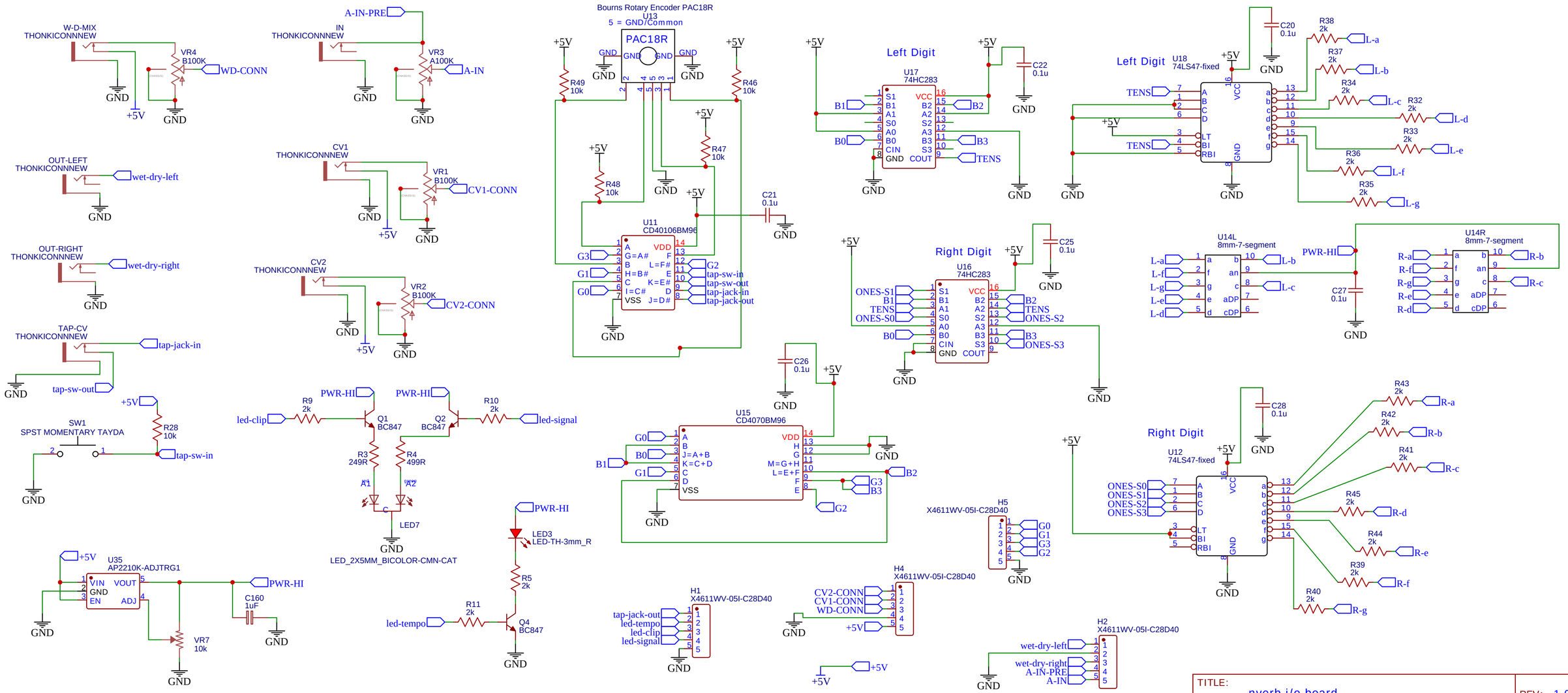


| | |
|---|---|
| TITLE: nverb i/o board | REV: 1.0 |
| EasyEDA | Company: 508: Loop Detected |
| | Sheet: 1/1 |
| | Date: 2021-04-15 Drawn By: rossgrady |