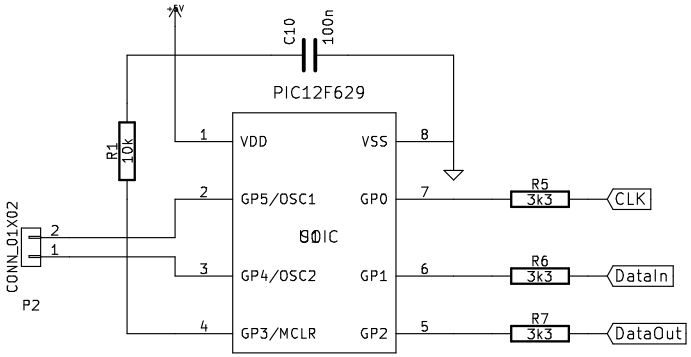


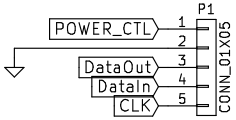


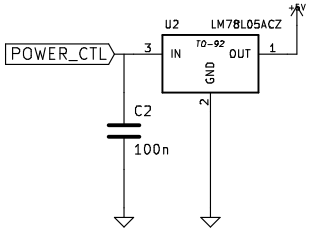


Sheet: /
File: emulator.sch

**Title:**

| | | |
|---|---|---|
| Size: A4 | Date: 30 jan 2014 | **Rev:** |
| KiCad E.D.A. kicad 0.201501202016+538320ubuntu14.04.1-product | | Id: 1/1 |