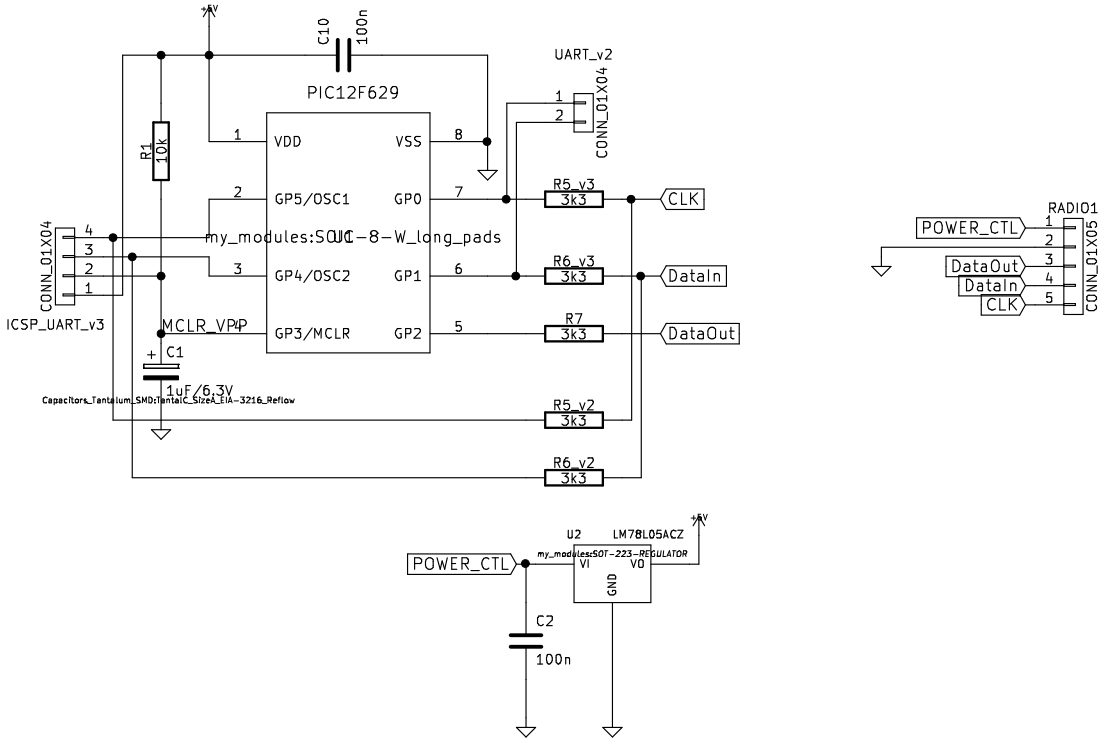

Sheet: /
File: emulator.sch

Title:

Size: A4	Date: 30 jan 2014	Rev:
KiCad E.D.A. kicad 0.201508120901+6086~28~ubuntu14.04.1-product		Id: 1/1