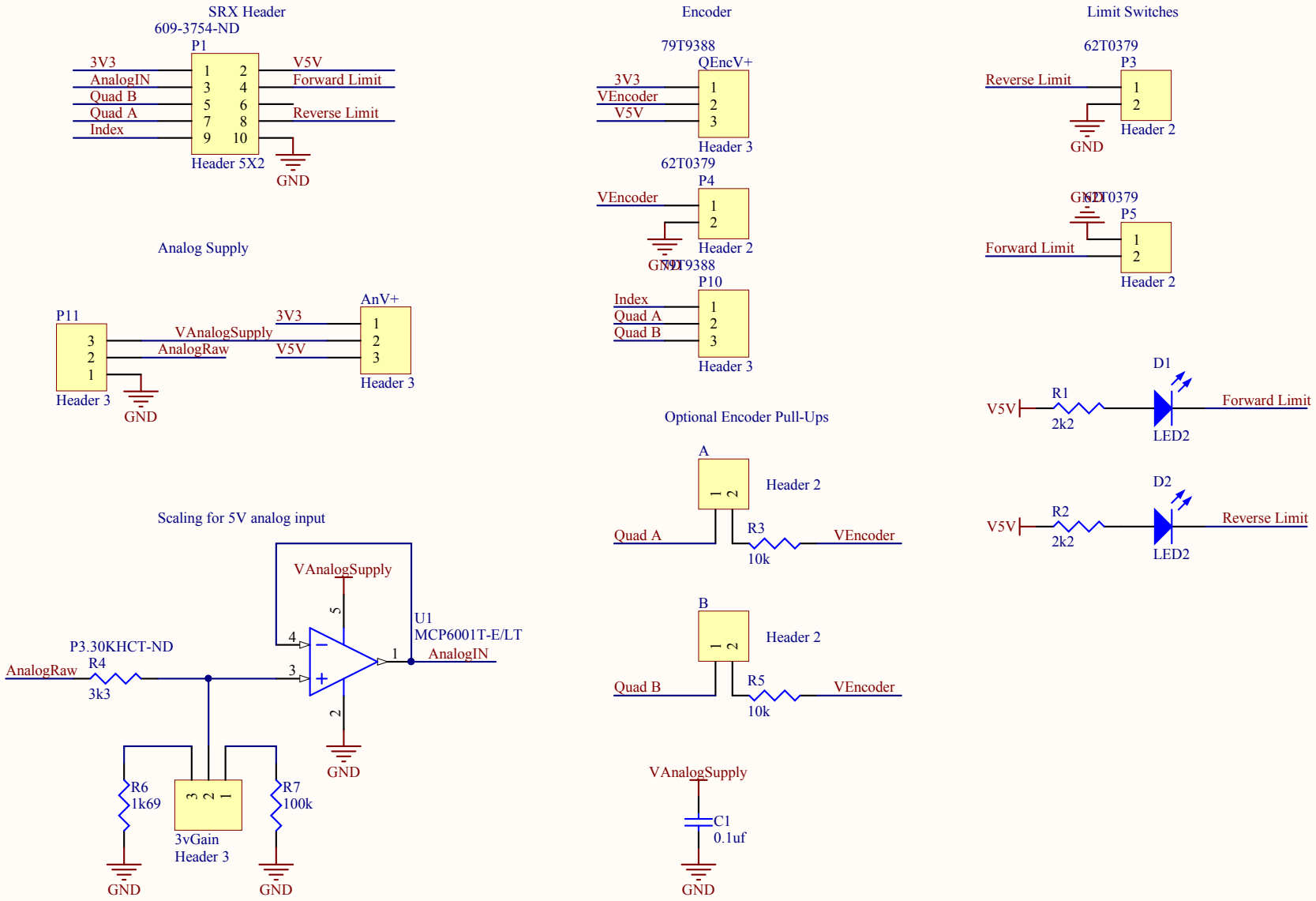
SRX Header
609-3754-ND
P1
3V3
AnalogIN
Quad B
Quad A
Index
1 2
3 4
5 6
7 8
9 10
V5V
Forward Limit
Reverse Limit
Header 5X2
GND
Encoder
79T9388
QEncV+
3V3
VEncoder
V5V
1
2
3
Header 3
62T0379
P4
VEncoder
1
2
Header 2
GND
79T9388
P10
Index
Quad A
Quad B
1
2
3
Header 3
Limit Switches
62T0379
P3
Reverse Limit
1
2
Header 2
GND
62T0379
P5
Forward Limit
1
2
Header 2
Analog Supply
P11
3
2
1
Header 3
GND
VAnalogSupply
AnalogRaw
3V3
V5V
AnV+
1
2
3
Header 3
Optional Encoder Pull-Ups
A
1 2
Header 2
Quad A
R3
10k
VEncoder
B
1 2
Header 2
Quad B
R5
10k
VEncoder
D1
V5V
R1
2k2
Forward Limit
LED2
D2
V5V
R2
2k2
Reverse Limit
LED2
Scaling for 5V analog input
VAnalogSupply
5
4
3
2
1
U1
MCP6001T-E/LT
AnalogIN
P3.30KHCT-ND
AnalogRaw
R4
3k3
GND
R6
1k69
3 2 1
3vGain
Header 3
R7
100k
GND
GND
3.3V Gain Adjust
VAnalogSupply
C1
0.1uf
GND
Title
Size
A
Number
Revision
Date:
12/26/2015
Sheet of
File:
Y:\TalonSRX\..\TalonSRXBreakout.SchDoc
Drawn By:

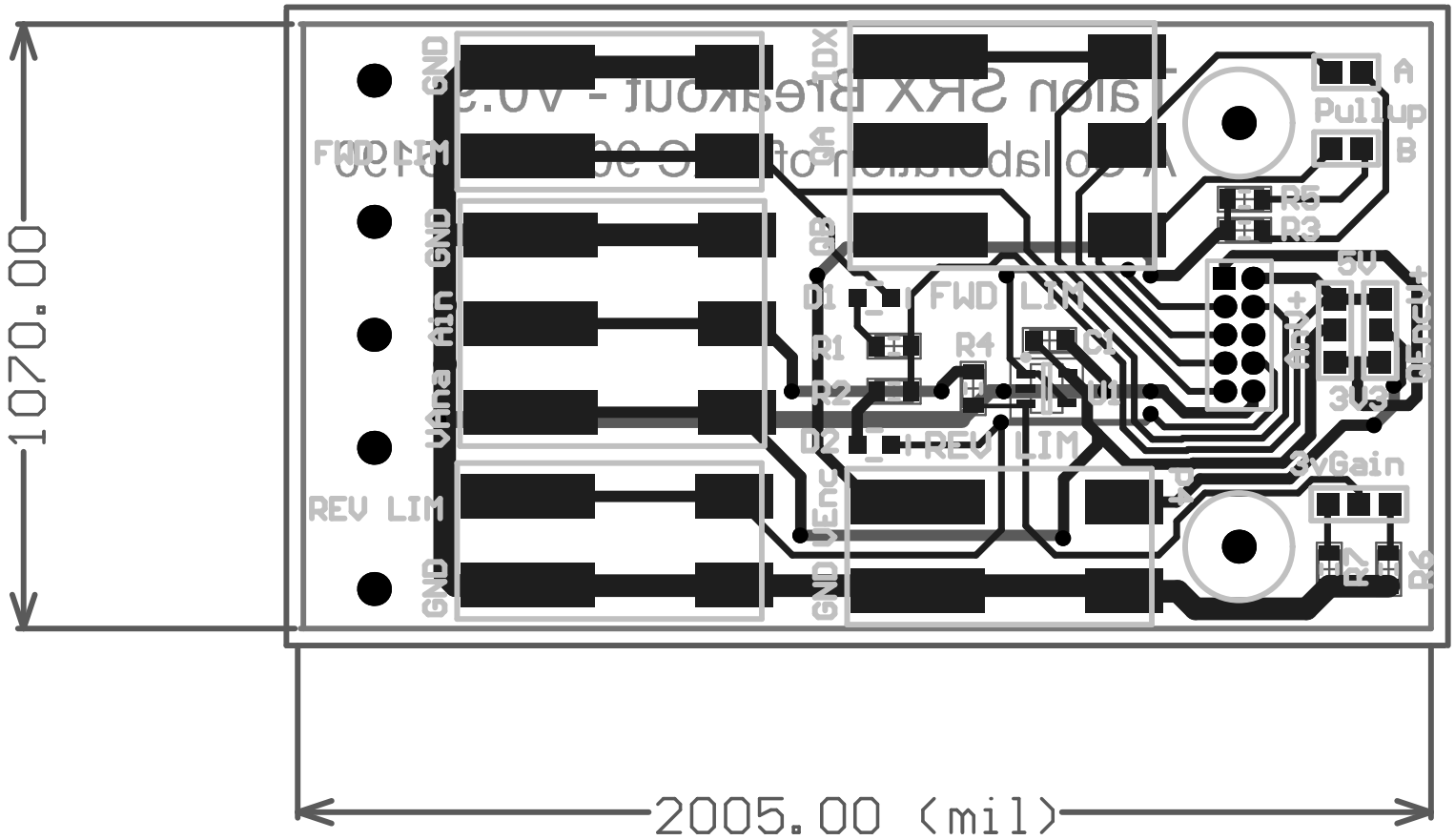

1070.00
2005.00 (mil)
GND
FWD LIM
GND
VAna Ain
REV LIM
GND
IDX
QA
QB
D1
FWD LIM
R1
R4
C1
R2
U1
D2
REV LIM
VEnc
GND
A
Pullup
B
R5
R3
5V
ARV+
VEncOut
3V3
3vGain
R7
R6

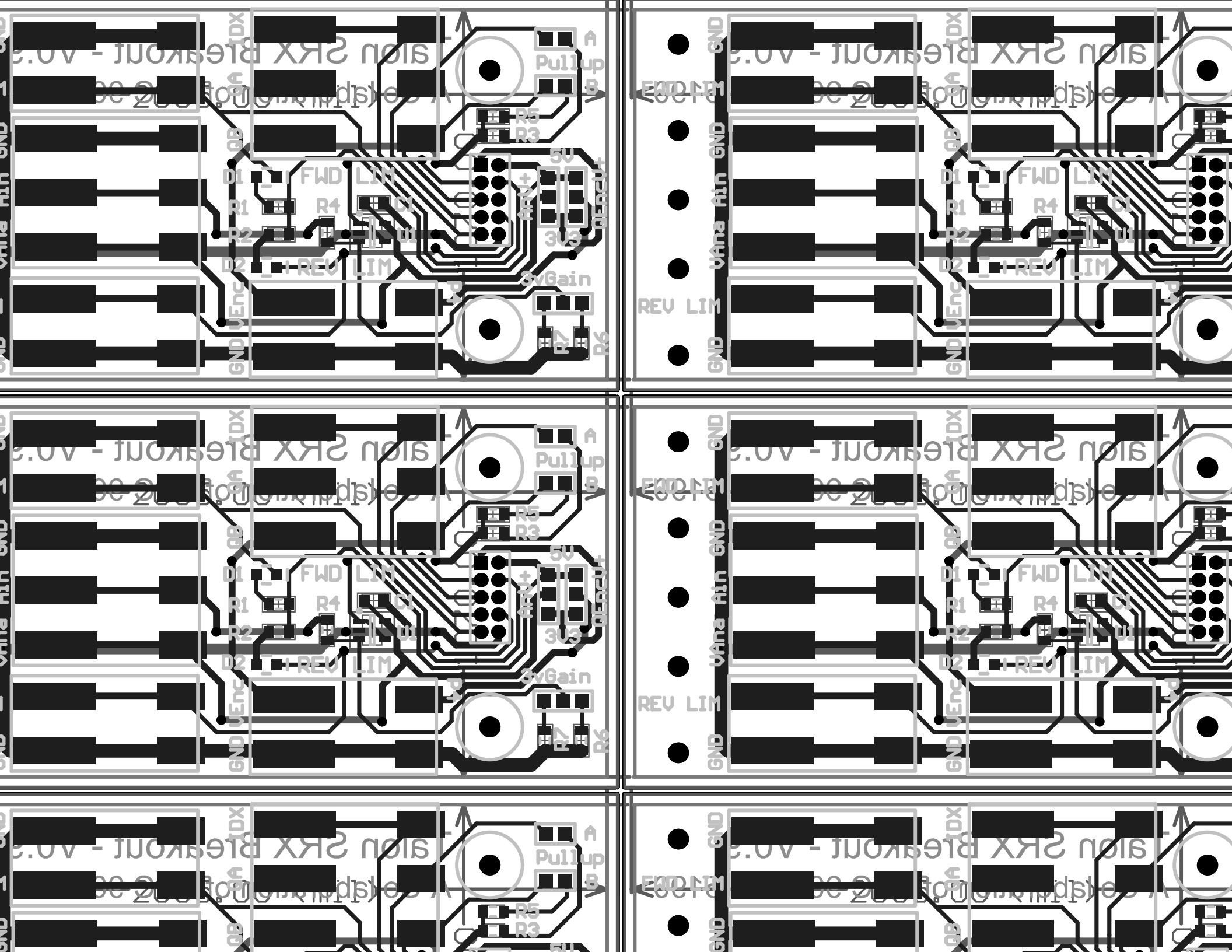
Pullup
A
B
R5
R3
5V
D1
FWD
LIM
R1
R4
C1
R2
D2
REV
LIM
3V3
3vGain
R7
R6
GND
VEnc
VAna
Ain
QB
QA
IDX

Bill of Materials

<Parameter Title not found>

Source Data From: TalonSRX.PrjPcb
Project: TalonSRX.PrjPcb
Variant: None

Creation Date: 12/26/2015 10:43:04 AM
Print Date: 26-Dec-15 10:43:06 AM

Production Quantity: 1
Currency <none>

Footprint	Comment	LibRef	Designator	Description	Quantity	Supplier 1	Supplier Part Number 1	Supplier Unit Price 1	Supplier Order Qty 1	Supplier Subtotal 1	#Column Name Error:	#Column Name Error:Manufacturer Part Nu
3 Pad Jumper	Header 3	Header 3	3vGain, AnV+, QEncV+	Header, 3-Pin	3							
2 Pad Jumper	Header 2	Header 2	A, B	Header, 2-Pin	2							
CAP 0603 (1608)	0.1uf	Capacitor Surface Mount	C1	Capacitor Surface Mount	1	Digi-Key	311-1344-1-ND	0.1	1	$ 0.10		
DIODE 0603/SOD-523F	LED2	LED2	D1, D2	Typical RED, GREEN, YELLOW, AMBER GaAs LED	2	Digi-Key	160-1646-1-ND	0.48	2	$ 0.96		
HDR2X5 - 50Mil	Header 5X2	Header 5X2	P1	Header, 5-Pin, Dual row	1	Digi-Key	609-3754-ND	0.81	1	$ 0.81		
Wago 2 Pin	Header 2	Header 2	P3, P4, P5	Header, 2-Pin	3	Newark	62T0379					
Wago 3 Pin	Header 3	Header 3	P10, P11	Header, 3-Pin	2	Newark	79T9388					
RES 0603 (1608)	2k2	Resistor Surface Mount	R1, R2	Resistor Surface Mount	2	Digi-Key	P2.2KJCT-ND	0.1	2	$ 0.20		
RES 0603 (1608)	10k	Resistor Surface Mount	R3, R5	Resistor Surface Mount	2	Digi-Key	P10KGCT-ND	0.1	2	$ 0.20		
RES 0603 (1608)	3k3	Resistor Surface Mount	R4	Resistor Surface Mount	1	Digi-Key	P3.3KHCT-ND					
RES 0603 (1608)	1k69	Resistor Surface Mount	R6	Resistor Surface Mount	1	Digi-Key	P1.69KHCT-ND	0.1	1	$ 0.10		
RES 0603 (1608)	100k	Resistor Surface Mount	R7	Resistor Surface Mount	1	Digi-Key	P100KHCT-ND	0.1	1	$ 0.10		
SC70-LT5_N	MCP6001T-E/LT	MCP6001T-E/LT	U1	1 MHz, Low-Power Operational Amplifier, Pin SC-70, Extended Temperature, Tape and Reel	1	Digi-Key	MCP6001T-E/LTCT-ND	0.32	1	$ 0.32		
					22					$ 2.79		

Approved **Notes**