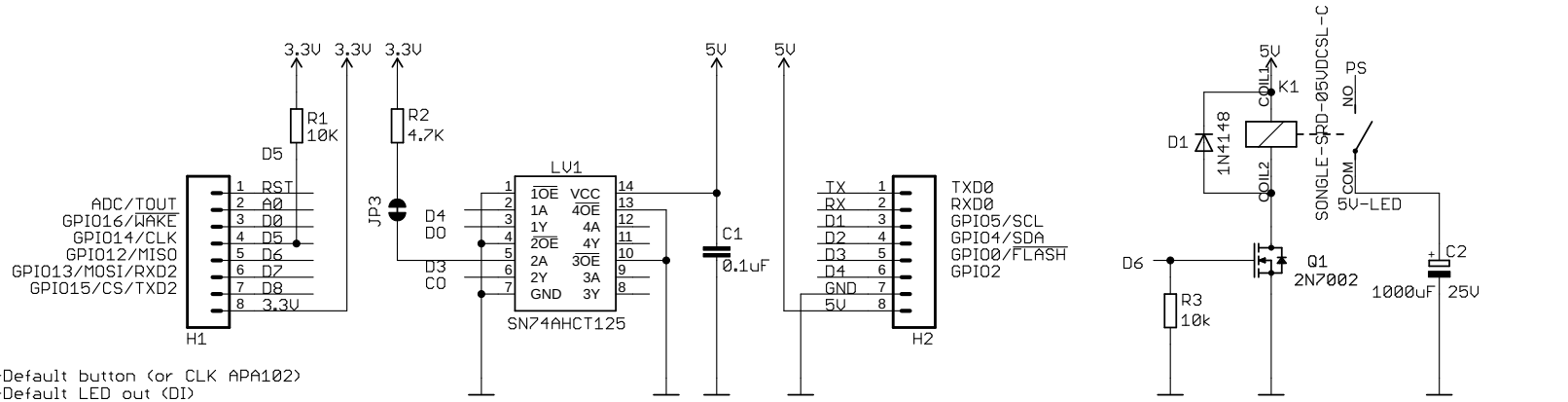

ESP8266

D3-GPIO0-Default button (or CLK APA102)
D4-GPIO2-Default LED out (DI)
D5-GPIO14-Optional button
D6-GPIO12-Relay
D7-GPIO13-Dallas sensor
RX-GPIO3-APA102 LED (CLK)
D1-GPIO5-SCL
D2-GPIO4-SDA

ESP32

GPIO17-Default button
GPIO16-Default LED out
GPIO19-Default-Relay
GPIO22-SCL
GPIO21-SDA
GPIO23-Dallas sensor

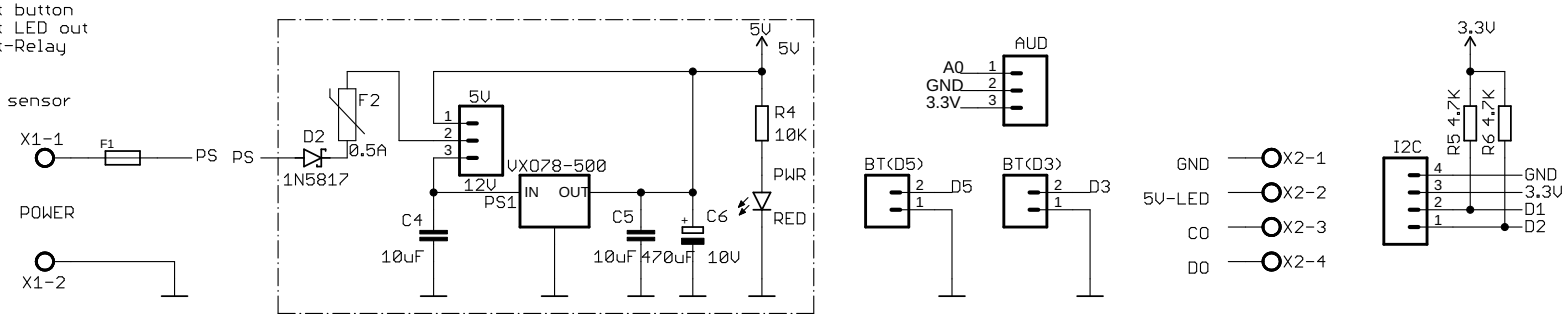

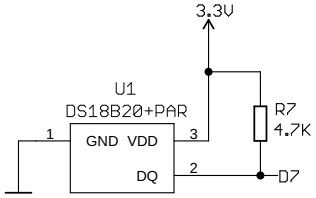

TITLE: WLED_Wemos_shield-v1.0	
Document Number:	REV:
Date: 5/7/20 9:53 AM	Sheet: 1/1