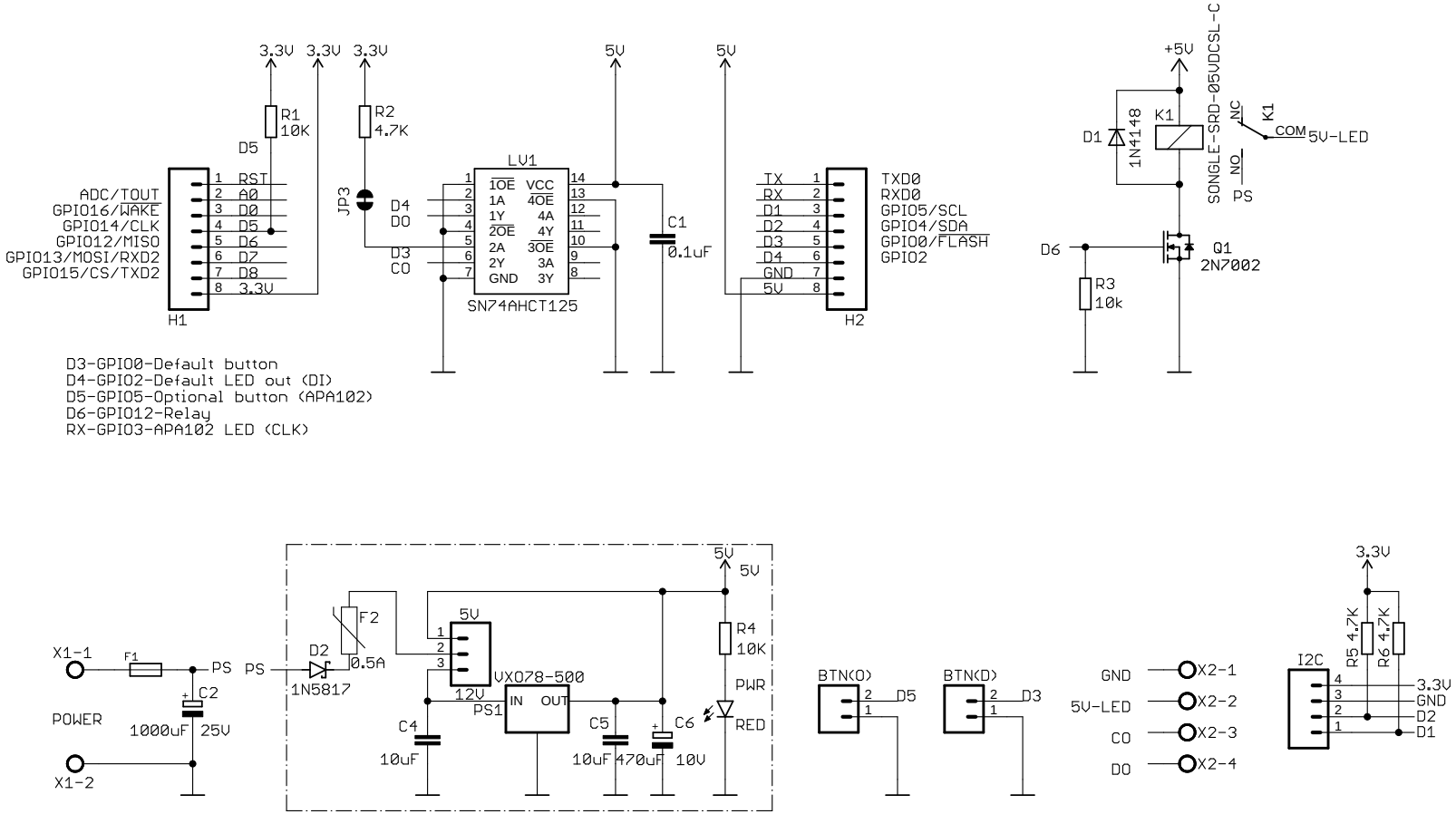

TITLE: WLED_Wemos_shi	
Document Number:	REV:
Date: 2/4/20 16:59	Sheet: 1/1