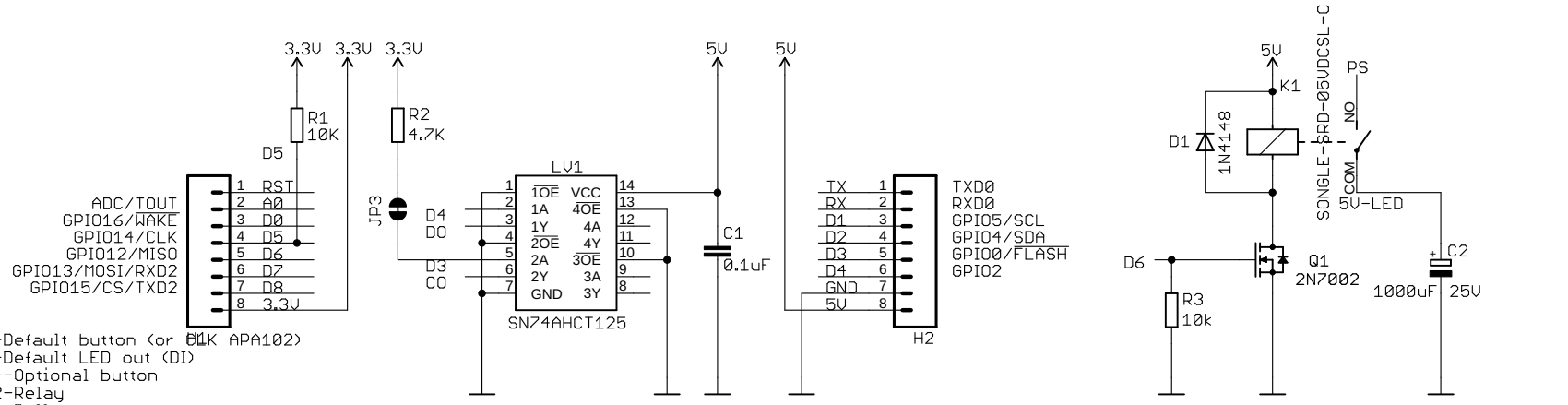

ESP8266

D3-GPIO0-Default button (or CLK APA102)
D4-GPIO2-Default LED out (DI)
D5-GPIO14-Optional button
D6-GPIO12-Relay
D7-GPIO13-Dallas sensor
D1-GPIO5-SCL
D2-GPIO4-SDA
A0-Analog in

ESP32

GPIO17-Default button (or CLK APA102)
GPIO16-Default LED out (DI)
GPIO18-Optional button
GPIO19-Relay
GPIO23-Dallas sensor
GPIO22-SCL
GPIO21-SDA
GPIO36-Analog in

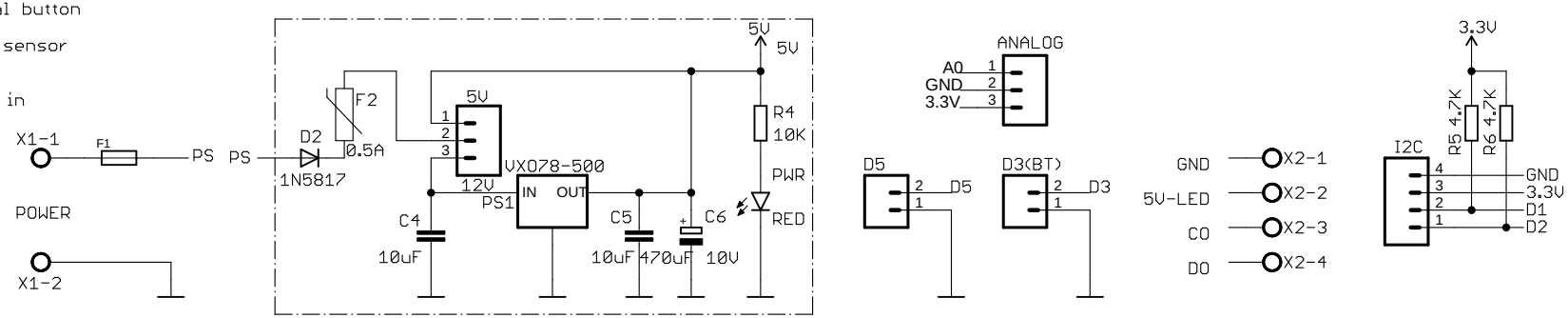

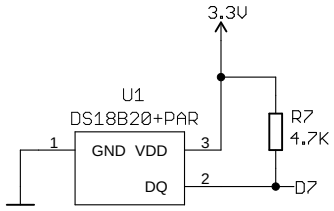

TITLE: WLED_Wemos_shield-v1.1	
Document Number:	REV:
Date: 7/11/20 3:21 PM	Sheet: 1/1