Chapter-01
Introduction to Transport layer

Q.1) define process-to-process communication at the transport layer and compare it with host-to-host communication at the network layer.

Process-to-process communication at the transport layer involves the exchange of data between two specific processes or applications running on different devices in a network. The transport layer is responsible for ensuring reliable and efficient communication between these processes. The most common protocols at the transport layer are Transmission Control Protocol (TCP) and User Datagram Protocol (UDP).

In process-to-process communication at the transport layer:

1. **End-to-End Communication:** The communication is end-to-end, meaning it occurs between the processes running on the source and destination devices. The transport layer shields the upper layers (application layer) from the details of the underlying network.
2. **Reliability:** Transport layer protocols like TCP provide reliable communication by ensuring that data is delivered without errors and in the correct order. This is crucial for applications that require accurate and complete data transmission.
3. **Flow Control:** The transport layer manages the flow of data between processes, preventing overwhelming of the receiving process by controlling the rate of data transmission.
4. **Connection-Oriented (TCP):** TCP, a connection-oriented protocol, establishes a reliable connection before data exchange. It ensures the integrity and order of data through features like acknowledgment, retransmission, and sequencing.
5. **Connectionless (UDP):** UDP, a connectionless protocol, provides a simpler, lower-overhead communication method. It does not establish a connection before transmitting data, making it faster but less reliable compared to TCP.

On the other hand, host-to-host communication at the network layer involves the exchange of data between two devices (hosts) in a network. The network layer is responsible for routing packets between different networks. The primary protocol at the network layer is the Internet Protocol (IP).

Comparison with host-to-host communication at the network layer:

1. **Scope of Communication:** Host-to-host communication at the network layer involves communication between devices (hosts) in a network, whereas process-to-process communication at the transport layer involves communication between specific processes or applications running on those hosts.
2. **Reliability:** The network layer (IP) provides best-effort delivery of packets between hosts but does not guarantee reliability. Reliability mechanisms, such as error checking and retransmission, are primarily implemented at the transport layer (TCP).
3. **Addressing:** The network layer uses IP addresses to identify and route packets between hosts, while the transport layer uses port numbers to identify specific processes on those hosts.

In summary, process-to-process communication at the transport layer focuses on the reliable and end-to-end communication between specific applications or processes, while host-to-host communication at the network layer deals with routing packets between devices in a network, providing best-effort delivery without guarantees of reliability at this layer.

Q.2) Discuss the addressing mechanism at the transport layer, to discuss port numbers, and to define the range port numbers used for different purposes.

At the transport layer, addressing is accomplished through the use of port numbers. Port numbers are 16-bit unsigned integers that help identify specific processes or services on a host device. When a packet arrives at a host, the port number helps the transport layer direct the data to the appropriate application or service running on that host.

There are two types of port numbers: well-known ports and dynamic or ephemeral ports.

1. **Well-Known Ports:**
    - Range: 0 to 1023
    - Purpose: Reserved for widely used services and protocols. These port numbers are standardized by the Internet Assigned Numbers Authority (IANA).
    - Examples:
        - Port 80: HTTP (Hypertext Transfer Protocol)
        - Port 21: FTP (File Transfer Protocol)
        - Port 22: SSH (Secure Shell)
        - Port 25: SMTP (Simple Mail Transfer Protocol)
        - Port 443: HTTPS (Hypertext Transfer Protocol Secure)
2. **Registered Ports:**
    - Range: 1024 to 49151
    - Purpose: Intended for user or application processes that are not as widely used as well-known ports. These ports can be registered with IANA to prevent conflicts.
    - Examples:
        - Port 3306: MySQL database
        - Port 8080: HTTP alternative port
3. **Dynamic or Ephemeral Ports:**
    - Range: 49152 to 65535
    - Purpose: Also known as private or temporary ports. These are typically used by the operating system to assign temporary port numbers to client applications during the initiation of communication.
    - Examples:
        - Port numbers dynamically assigned by the operating system for client-server communication.

The combination of an IP address and a port number provides a unique endpoint for communication, allowing the transport layer to deliver data to the correct process running on a specific host.

For example, in the context of TCP/IP networking, a communication endpoint might be represented as a tuple (IP address, port number), such as (192.168.1.1, 80). This means that the data should be directed to the device with the IP address 192.168.1.1 and the application or process using port 80.

In summary, port numbers at the transport layer play a crucial role in identifying specific processes or services on a host, facilitating the proper routing of data to its intended destination. Well-known, registered, and dynamic port ranges help organize and manage these assignments in the networking ecosystem.

Q.3) Explain the packetizing issue at the transport layer: encapsulation and decapsulation of messages.

The packetizing issue at the transport layer involves the process of breaking down messages or data into smaller units called packets for transmission over a network. This process is known as encapsulation. Conversely, at the receiving end, the transport layer needs to reconstruct the original message by extracting and reassembling the packets, a process called decapsulation.

Here's a breakdown of the packetizing issue:

1. **Encapsulation:**
   - **Sender's Perspective:** When an application at the sender's end wants to send a message, the transport layer takes responsibility for breaking down the message into smaller, manageable units called packets. Each packet typically includes a header and a payload.
   - **Header Information:** The header contains control information, such as source and destination port numbers, sequence numbers (in the case of TCP), and other control flags. This information is vital for the proper delivery and reconstruction of the message at the receiving end.
   - **Payload:** The payload carries a portion of the original message. The division of the message into packets allows for efficient transmission over the network and helps in managing network resources effectively.
2. **Transmission Over Network:**
   - **Routing:** Once the message is encapsulated into packets, each packet is sent individually over the network. Routers and switches in the network use the header information to route the packets to the correct destination.
3. **Decapsulation:**
   - **Receiver's Perspective:** When the packets arrive at the destination host, the transport layer at the receiver's end is responsible for extracting the information from the headers and reassembling the packets to reconstruct the original message.
   - **Verification and Reordering:** The transport layer checks for errors, verifies the integrity of the received packets, and ensures that they are in the correct order. For example, in TCP, sequence numbers are used to order the packets.
4. **Delivery to Application Layer:**
   - **Reconstruction:** Once the packets are successfully reassembled, the transport layer delivers the reconstructed message to the appropriate application at the receiving end.

The encapsulation and decapsulation processes at the transport layer are essential for reliable and efficient communication over a network. They enable the transmission of messages in a way that ensures data integrity, proper sequencing, and efficient use of network resources.

Two common transport layer protocols, TCP (Transmission Control Protocol) and UDP (User Datagram Protocol), handle encapsulation and decapsulation differently. TCP provides reliable, connection-oriented communication with error checking and retransmission mechanisms, while UDP is connectionless and provides a simpler, lower-overhead method without guarantees of reliability.

Q.4) Discuss multiplexing (many-to-one) and demultiplexing (one-to- many) services provided by the transport layer.

Multiplexing and demultiplexing are essential services provided by the transport layer to enable multiple communication streams to share a single communication channel. These processes facilitate the efficient use of network resources and ensure that data from different applications or processes can be transmitted and received without interference. Here's a discussion of multiplexing (many-to-one) and demultiplexing (one-to-many) services:

1. **Multiplexing (Many-to-One):**
    - **Definition:** Multiplexing is the process of combining multiple data streams or communication channels into a single stream for transmission over a shared medium. In the context of the transport layer, it involves the bundling of data from different applications or processes into a single communication stream.
    - **Purpose:** The primary goal of multiplexing is to maximize the utilization of network resources, allowing multiple applications to share the same network connection concurrently.
    - **Techniques:**
        - **Port Numbers:** Multiplexing is achieved using port numbers. Each communication stream is associated with a unique port number, and these port numbers are used to differentiate between different applications or processes.
        - **Header Information:** The transport layer adds a header to each packet that includes information such as source and destination port numbers. This header is crucial for demultiplexing at the receiving end.
2. **Demultiplexing (One-to-Many):**
    - **Definition:** Demultiplexing is the process of extracting multiple data streams from a single communication stream at the receiving end. It involves identifying the intended recipient for each packet and delivering the data to the appropriate application or process.
    - **Purpose:** Demultiplexing ensures that data sent over a network can be correctly directed to the intended applications or processes running on the receiving device.
    - **Techniques:**
        - **Port Numbers:** The transport layer uses the port numbers in the header of each packet to demultiplex the incoming data. The port number helps identify the destination application or process.
        - **Socket:** The combination of an IP address and a port number is known as a socket. Sockets uniquely identify each communication endpoint, allowing the transport layer to demultiplex data based on the socket information.
3. **Example: Multiplexing and Demultiplexing with TCP:**
    - In TCP (Transmission Control Protocol), each communication stream is identified by a unique combination of source IP address, source port number, destination IP address, and destination port number.
    - The transport layer at the sender's end uses this information to multiplex data into a stream of packets.
    - At the receiver's end, the transport layer demultiplexes the incoming packets by examining the destination port number in each packet's header and delivers the data to the appropriate application or process.

In summary, multiplexing and demultiplexing services provided by the transport layer are fundamental for managing the simultaneous transmission of data from multiple applications or processes over a shared network connection. The use of port numbers and socket information enables the efficient and accurate routing of data to its intended destination.

Q.5) Discuss flow control and how it can be achieved at the transport layer?

Flow control is a crucial mechanism implemented at the transport layer to manage the rate of data transmission between two communicating devices, preventing the sender from overwhelming the receiver. The goal is to maintain a balance between the sending and receiving speeds to ensure efficient and reliable communication. Flow control is particularly important in scenarios where the rate of data production by the sender may exceed the rate at which the receiver can process and handle the incoming data.

There are two main types of flow control:

1. **Stop-and-Wait Flow Control:**
    - In this simple mechanism, the sender sends a single packet and then waits for an acknowledgment from the receiver before sending the next packet.
    - The advantage is that it ensures reliable communication, as the sender doesn't proceed until it receives confirmation that the previous packet was successfully received.
    - However, it may lead to inefficiencies, especially in high-latency networks, as the sender has to wait for acknowledgment before sending the next packet.
2. **Sliding Window Flow Control:**
    - Sliding window flow control is a more advanced and widely used approach that allows multiple packets to be in transit at the same time, improving efficiency.
    - The sender maintains a "window" of allowable, consecutive sequence numbers that it can send without receiving an acknowledgment. The receiver advertises its available buffer space, indicating the size of the window.
    - The sender can transmit packets within the window without waiting for acknowledgment. As acknowledgments are received, the window slides, allowing more packets to be sent.
    - This method increases throughput and efficiency by allowing a continuous flow of data without frequent stops.

Achieving flow control at the transport layer is typically implemented through the use of specific protocols, and two primary transport layer protocols that incorporate flow control mechanisms are:

1. **Transmission Control Protocol (TCP):**
    - TCP is a connection-oriented protocol that provides reliable, error-checked communication.
    - Flow control in TCP is achieved using a sliding window mechanism. The receiver advertises its window size, indicating the number of bytes it can accept.
    - The sender adjusts the transmission rate based on the advertised window size to prevent overwhelming the receiver.
2. **User Datagram Protocol (UDP):**
    - UDP, being a connectionless protocol, does not provide built-in flow control mechanisms.
    - Applications using UDP may need to implement their own flow control mechanisms if necessary. This can involve rate limiting, error detection, and retransmission strategies if reliability is crucial.

In summary, flow control at the transport layer is essential for managing the pace of data transmission between communicating devices. Stop-and-wait and sliding window mechanisms are common approaches, and the specific implementation details depend on the transport layer protocol being used, with TCP being a prominent example incorporating sophisticated flow control mechanisms.

Q.6) discuss error control and how it can be achieved at the transport layer?

Error control at the transport layer involves mechanisms to detect and correct errors that may occur during the transmission of data between two devices in a network. The primary goal is to ensure the integrity and reliability of the transmitted data. Error control is especially crucial in scenarios where network conditions may lead to packet loss, corruption, or reordering. Two key aspects of error control are error detection and error correction.

1. Error Detection:

- **Checksums and Hashing:** One common method for error detection is the use of checksums or hash functions. The sender generates a checksum or hash value based on the content of the data and includes it in the packet. The receiver recalculates the checksum or hash upon receiving the data and compares it with the received value. A mismatch indicates a potential error.

- **Cyclic Redundancy Check (CRC):** CRC is a more sophisticated error-detection technique commonly used at the transport layer. The sender computes a CRC value based on the data, appends it to the packet, and sends it. The receiver performs the same CRC calculation on the received data and checks for a match.

2. Error Correction:

- **Automatic Repeat reQuest (ARQ):**
  - **Stop-and-Wait ARQ:** In this simple approach, the sender transmits a packet and waits for an acknowledgment from the receiver. If the acknowledgment is not received within a specified time, or if it is a negative acknowledgment indicating an error, the sender retransmits the packet.
  - **Selective Repeat ARQ:** This more advanced technique allows for the simultaneous transmission of multiple packets before waiting for acknowledgments. The receiver acknowledges each packet individually, and the sender only retransmits the packets that were not successfully received.
- **Forward Error Correction (FEC):**
  - FEC involves adding redundant information to the transmitted data, allowing the receiver to correct errors without the need for retransmission.
  - Reed-Solomon codes and convolutional codes are examples of FEC techniques used at the transport layer.

Achieving Error Control in Common Transport Layer Protocols:

1. **Transmission Control Protocol (TCP):**
   - TCP uses a combination of error detection and automatic repeat request (ARQ) for error control.
   - It includes checksums to detect errors in the header and payload.
   - ARQ is implemented through a sliding window mechanism, allowing for the retransmission of packets in case of errors or loss.
2. **User Datagram Protocol (UDP):**
   - UDP is a connectionless protocol that does not provide built-in error correction mechanisms.
   - Applications using UDP may need to implement their own error control mechanisms, or they may rely on higher-layer protocols or application-level error recovery.

In summary, error control at the transport layer involves the use of various techniques, including error detection through checksums, CRC, and error correction through ARQ or FEC. The specific mechanisms employed depend on the transport layer protocol in use, with TCP and UDP being prominent examples, each addressing error control in different ways based on their design goals.

Q.7) Discuss congestion control and how it can be achieved at the transport layer.?

Congestion control is a critical mechanism implemented at the transport layer to manage and alleviate congestion in computer networks. Congestion occurs when the demand for network resources exceeds its capacity, leading to performance degradation, packet loss, and potential network instability. The primary goals of congestion control are to ensure fair resource allocation, prevent network collapse, and maintain optimal network performance. Congestion control is particularly crucial in environments where multiple users or applications share the same network infrastructure.

Key Concepts in Congestion Control:

1. **Congestion Detection:**
   - **Packet Loss:** An increase in packet loss is often an indicator of congestion. Lost packets can result from network devices, such as routers or switches, being unable to handle the incoming traffic.
2. **Congestion Avoidance:**
   - **Traffic Regulation:** Congestion avoidance mechanisms aim to regulate the rate at which data is injected into the network to prevent congestion from occurring in the first place.
   - **Window-based Approaches:** Techniques like TCP's congestion window are used to dynamically adjust the rate of data transmission based on network conditions.
3. **Congestion Recovery:**
   - **Retransmission and Timeout Handling:** In the event of congestion-related packet loss, congestion control mechanisms need to facilitate the recovery of lost packets. This involves retransmitting lost packets after a timeout period.
4. **Explicit Congestion Notification (ECN):**
   - **ECN Bits:** Some transport layer protocols, like TCP, support the use of ECN bits in packet headers. These bits indicate congestion conditions to routers and endpoints, allowing for proactive congestion avoidance.

Techniques for Achieving Congestion Control:

1. **Window-based Congestion Control:**
   - **TCP Congestion Control Algorithms:** TCP employs various congestion control algorithms, including:
     - **Slow Start:** Gradually increases the congestion window size until a threshold is reached.
     - **Congestion Avoidance:** Adjusts the congestion window based on packet acknowledgments to maintain optimal throughput.
     - **Fast Retransmit and Fast Recovery:** Quickly retransmits lost packets without waiting for a timeout, speeding up recovery.
2. **Active Queue Management (AQM):**
   - **Random Early Detection (RED):** A queue management strategy implemented in routers to detect and prevent congestion before it becomes severe. RED randomly drops or marks packets when the queue is close to capacity, signaling to senders to reduce their transmission rates.
3. **Explicit Congestion Notification (ECN):**
   - **ECN Bits:** TCP supports ECN bits in packet headers. When routers experience congestion, they may set ECN bits, informing endpoints to slow down without dropping packets.
4. **Traffic Policing and Shaping:**
   - **Token Bucket Algorithm:** Network devices use algorithms like the token bucket to regulate the rate of incoming traffic, preventing bursts that could lead to congestion.
5. **Quality of Service (QoS):**
   - **Prioritization:** QoS mechanisms allow for the prioritization of certain types of traffic, ensuring that critical applications receive preferential treatment during times of congestion.

In summary, congestion control at the transport layer involves a combination of techniques such as window-based algorithms, active queue management, ECN, traffic policing, and QoS. These mechanisms work together to detect, avoid, and recover from congestion, promoting the efficient use of network resources and maintaining the overall stability and performance of the network.

Q.8) Discuss the connectionless and connection-oriented services at the transport layer and show their implementation using an FSM?

The transport layer provides two main types of services: connection-oriented and connectionless. These services determine how data is transferred between communicating devices in a network. A Finite State Machine (FSM) is a useful tool to illustrate the behavior of these services. Let's discuss connectionless and connection-oriented services and provide a simplified FSM for each.

1. Connectionless Service:

Connectionless communication, as exemplified by the User Datagram Protocol (UDP), is a service where each packet is treated independently, and there is no prior establishment of a connection before data transmission.

Finite State Machine (FSM) for Connectionless Service:

State: IDLE

Event: Data Transmission Request
Action: Send Data

Event: Data Received
Action: Deliver Data to Application

In a connectionless service FSM, the system is always in an idle state. When a data transmission request occurs, the system sends the data. Upon receiving data, it is directly delivered to the application. There is no establishment or termination of a connection.

2. Connection-Oriented Service:

Connection-oriented communication, as demonstrated by the Transmission Control Protocol (TCP), involves the establishment, maintenance, and termination of a connection before and after data transfer.

Finite State Machine (FSM) for Connection-Oriented Service:

State: CLOSED

Event: Connection Request
Action: Send SYN
New State: SYN_SENT

Event: SYN Received
Action: Send SYN-ACK
New State: SYN_RECEIVED

Event: ACK Received
Action: Connection Established
New State: ESTABLISHED

Event: Data Transmission Request
Action: Send Data

Event: Connection Termination Request
Action: Send FIN
New State: FIN_WAIT_1

Event: FIN Received
Action: Send ACK
New State: CLOSE_WAIT

Event: ACK Received
Action: Connection Terminated
New State: CLOSED

In a connection-oriented service FSM, the system starts in the CLOSED state. When a connection request occurs, the system goes through a series of states, including SYN_SENT and SYN_RECEIVED, until the connection is established in the ESTABLISHED state. Data can then be transmitted. When a connection termination request is received, the system transitions through states like FIN_WAIT_1 and CLOSE_WAIT until the connection is fully terminated and returns to the CLOSED state.

In summary, connectionless services, like UDP, do not establish a connection before sending data, while connection-oriented services, like TCP, involve the establishment and termination of a connection before and after data transmission. The FSMs illustrate the sequence of states and events that govern the behaviour of these services.

Q.9) Discuss the behavior of four generic transport-layer protocols and their applications: simple protocol, Stop-and-Wait protocol, Go-Back- N protocol, and Selective-Repeat protocol.

Let's discuss the behavior of four generic transport-layer protocols: Simple Protocol, Stop-and-Wait Protocol, Go-Back-N Protocol, and Selective-Repeat Protocol. These are simplified representations to illustrate fundamental concepts and are not specific implementations.

1. Simple Protocol:

Behavior:

- **Basic Concept:** The Simple Protocol is a straightforward approach where the sender sends a packet to the receiver, and the receiver responds with an acknowledgment (ACK).
- **No Sequence Numbers:** There are no sequence numbers, and the protocol assumes reliable delivery without error checking or recovery mechanisms.
- **Limitations:** Prone to issues such as out-of-order delivery, duplication, and no error recovery.

Applications:

- Suitable for environments with low error rates and where simplicity is more critical than reliability.
- Rarely used in real-world scenarios due to its lack of error detection and correction mechanisms.

2. Stop-and-Wait Protocol:

Behavior:

- **Basic Concept:** The sender sends one packet and waits for an acknowledgment (ACK) from the receiver before sending the next packet.
- **Flow Control:** Provides a simple form of flow control by regulating the rate of transmission.
- **Reliability:** Ensures reliable communication by waiting for acknowledgment before proceeding.

Applications:

- Suitable for scenarios with low bandwidth or high error rates where a sender needs to ensure that each packet is received before sending the next.

3. Go-Back-N Protocol:

Behavior:

- **Sliding Window Approach:** The sender can transmit multiple packets (window size) before waiting for acknowledgments.

- **Window Size:** The sender maintains a window of sent but unacknowledged packets.
- **Selective Retransmission:** If an acknowledgment is not received within a timeout, the sender retransmits all unacknowledged packets in the window.

Applications:

- Effective in scenarios with moderate error rates and network congestion.
- Commonly used in many data link layer protocols like HDLC.

4. Selective-Repeat Protocol:

Behavior:

- **Sliding Window Approach:** Similar to Go-Back-N but with a more advanced approach.
- **Acknowledgments:** The receiver acknowledges each correctly received packet individually.
- **Retransmission:** If a packet is lost or corrupted, only that specific packet is retransmitted.

Applications:

- Efficient in scenarios with higher bandwidth and where selective retransmission is advantageous.
- Commonly used in modern high-speed networks, including TCP for reliable data transfer.

Comparison:

- **Reliability:** Simple Protocol lacks reliability mechanisms, while Stop-and-Wait, Go-Back-N, and Selective-Repeat incorporate acknowledgments for reliability.
- **Flow Control:** Stop-and-Wait provides basic flow control, whereas Go-Back-N and Selective-Repeat offer more sophisticated sliding window mechanisms for improved throughput.
- **Error Handling:** Go-Back-N retransmits a range of packets on a timeout, while Selective-Repeat only retransmits the lost/corrupted packet.

In real-world implementations, protocols like Stop-and-Wait, Go-Back-N, and Selective-Repeat are applied at the transport layer, often as part of reliable transport layer protocols like TCP. These protocols adapt to various network conditions and provide a balance between simplicity and efficiency.

Q.10) Describe the idea of bidirectional communication at the transport layer using the piggybacking method.

Bidirectional communication at the transport layer involves the exchange of data between two devices in both directions. The piggybacking method is a technique used to improve the efficiency of bidirectional communication by combining data and acknowledgment messages within the same packet. This method helps reduce the overhead associated with separate acknowledgment messages, leading to more effective use of network resources.

Here's how the piggybacking method works:

1. **Data Transmission:**
    - When one device (let's say, Device A) wants to send data to another device (Device B), it includes the data in a packet and sends it to the destination.
2. **Acknowledgment Piggybacking:**
    - If Device B has data to send to Device A or needs to acknowledge a received packet, it takes advantage of the opportunity created by the incoming data packet from Device A.
    - Instead of sending a separate acknowledgment packet, Device B piggybacks the acknowledgment onto the data packet it sends back to Device A.
3. **Combined Packet:**
    - The combined packet contains both the data from Device A to Device B and the acknowledgment from Device B to Device A.
    - This single packet serves a dual purpose, efficiently carrying both data and acknowledgment information.
4. **Reduced Overhead:**
    - By piggybacking acknowledgments onto data packets, the overall network overhead is reduced. This is particularly beneficial in scenarios where the acknowledgment messages are short and frequent.
5. **Efficiency Improvement:**
    - Piggybacking helps avoid the transmission of additional acknowledgment packets, which can be especially beneficial in bidirectional communication where devices are exchanging data in both directions.

Example Scenario:

- **Device A to Device B:**
    - Device A sends a packet containing data to Device B.
- **Device B to Device A:**
    - Instead of sending a separate acknowledgment, Device B piggybacks the acknowledgment onto the packet it sends back to Device A.
- **Combined Packet:**
    - The packet received by Device A contains both the acknowledgment for the data sent from A to B and potentially new data from B to A.

The piggybacking method is commonly employed in transport layer protocols, such as Transmission Control Protocol (TCP). In TCP, acknowledgments for received data are often piggybacked onto outgoing data packets, reducing the need for separate acknowledgment messages and improving overall communication efficiency in bidirectional scenarios.

Q.11) A sender sends a series of packets to the same destination using 5-bit sequence of numbers. If the sequence number starts with 0, what is the sequence number of the 100th packet?

If the sequence numbers start with 0 and are 5 bits in length, they can represent values from 00000 (binary for 0) to 11111 (binary for 31) in a binary counting system. The sequence number will wrap around when it reaches the maximum value.

To find the sequence number of the 100th packet, we need to determine the remainder when 100 is divided by the total number of possible sequence numbers.

$$\text{Sequence number of the 100th packet} = 100 \bmod 32$$

Sequence number of the 100th packet=100mod32

Calculating the remainder:

$$100 \bmod 32 = 4$$

100mod32=4

So, the sequence number of the 100th packet is 4.

Q.12) Using 5-bit sequence numbers, what is the maximum size of the send and receive windows for each of the following protocols? a. Stop-and-Wait b. Go-Back-N c. Selective-Repeat.

The size of the send and receive windows in a communication protocol is determined by the number of available sequence numbers. In a 5-bit sequence number space, the total number of unique sequence numbers is 2^5=32.

a. for sender=1

for receiver=1

b. for sender= 2^m-1

= 2^5-1

=32-1

=31

for receiver=1

C. for sender=2^(m-1)

=2^(5-1)

=2^4

=16

for receiver=16

Q.13) Discuss how some application programs can benefit from the simplicity of UDP.

User Datagram Protocol (UDP) is a connectionless and lightweight transport layer protocol that provides a simple and minimalistic way to transmit data between applications over a network. While UDP does not guarantee reliable and ordered delivery of data like Transmission Control Protocol (TCP), it offers several advantages in terms of simplicity, low overhead, and reduced latency. Some application programs can benefit from the simplicity of UDP in various ways:

1. **Real-Time Applications:**
   - **VoIP (Voice over Internet Protocol):** Voice and video calls often use UDP for its low latency. In real-time communication, such as online voice and video chats, the immediacy of data transmission is prioritized over the guaranteed delivery of every packet. If some packets are lost, the application may choose to tolerate it rather than introducing delays for retransmissions.
2. **Streaming Services:**
   - **Live Streaming:** UDP is commonly used for live streaming applications, such as online video streaming or live broadcasts. The low overhead and reduced latency of UDP are advantageous for delivering content quickly, and occasional packet loss may not significantly impact the overall user experience.
3. **Online Gaming:**
   - **Multiplayer Games:** Many online multiplayer games leverage UDP due to its low latency and fast data transmission. In gaming, real-time interactions are critical, and the occasional loss of non-critical packets may be acceptable. The speed of UDP is often more important than ensuring the delivery of every piece of data.
4. **DNS (Domain Name System):**
   - **DNS Queries:** DNS uses both UDP and TCP, but for simple DNS queries (such as resolving domain names to IP addresses), UDP is often preferred. The lightweight nature of UDP is well-suited for quick, single-shot queries without the need for establishing a connection.
5. **IoT (Internet of Things):**
   - **Sensor Data Transmission:** IoT devices often generate small packets of sensor data that need to be transmitted quickly. UDP can be suitable for such scenarios, especially when low latency is crucial, and the loss of occasional data packets is acceptable.
6. **Broadcast and Multicast Services:**
   - **Multicast Streaming:** UDP is commonly used for multicast streaming where a single stream can be sent to multiple recipients simultaneously. The simplicity of UDP makes it suitable for scenarios where broadcast-style communication is required.
7. **Network Monitoring and Measurement:**
   - **Ping and Traceroute:** Tools like ping and traceroute use UDP packets for network diagnostics. These tools prioritize simplicity and speed to provide quick insights into network reachability and latency.

While UDP offers simplicity and low overhead, it is essential to note that it does not provide mechanisms for error recovery, flow control, or retransmission. Therefore, applications using UDP need to handle these aspects at the application layer if required. The decision to use UDP depends on the specific requirements and characteristics of the application, and it is well-suited for scenarios where real-time communication and low latency are critical.

Q..14) In cases where reliability is not of primary importance, UDP would make a good transport protocol. Give examples of specific cases.

UDP (User Datagram Protocol) is a lightweight and connectionless transport layer protocol that provides minimal services compared to TCP. It does not guarantee reliable and ordered delivery of data but offers lower overhead and reduced latency. UDP is suitable for scenarios where real-time communication, speed, and simplicity are prioritized over reliability. Here are examples of specific cases where UDP is well-suited:

1. **Live Streaming and Broadcasting:**
    - **Example:** Online video streaming, live broadcasts, and webinars.
    - **Reason:** UDP's low latency and reduced overhead make it ideal for delivering real-time video and audio content. Occasional packet loss may be acceptable in these scenarios.
2. **VoIP (Voice over Internet Protocol):**
    - **Example:** Voice and video calls using applications like Skype, Zoom, or WhatsApp.
    - **Reason:** Real-time communication requires low latency, and UDP can provide faster data transmission. In VoIP applications, immediate responsiveness is more critical than occasional packet loss.
3. **Online Gaming:**
    - **Example:** Multiplayer online games.
    - **Reason:** Online gaming demands low latency to provide a seamless user experience. While packet loss may occur occasionally, fast data transmission is crucial for real-time interactions in gaming.
4. **DNS (Domain Name System) Queries:**
    - **Example:** DNS resolution for website addresses.
    - **Reason:** DNS queries are typically short-lived and can benefit from the simplicity and low overhead of UDP. If a DNS query is lost, the system can issue a new query without significant impact.
5. **Network Discovery and Service Announcement:**
    - **Example:** Service discovery in local networks (e.g., mDNS/Bonjour).
    - **Reason:** Protocols like mDNS use UDP for lightweight and quick service discovery within local networks. Immediate responsiveness is favored over reliability.
6. **Broadcasting and Multicasting:**
    - **Example:** Broadcasting messages to multiple recipients.
    - **Reason:** UDP supports broadcasting and multicasting efficiently, making it suitable for scenarios where data needs to be sent to multiple recipients simultaneously.
7. **IoT (Internet of Things) Applications:**
    - **Example:** Sensor data transmission.

- **Reason:** IoT devices often generate small, frequent packets of sensor data. UDP's low overhead and simplicity make it suitable for transmitting sensor data quickly without the need for reliability guarantees.

8. **Network Monitoring and Measurement Tools:**
    - **Example:** Ping and traceroute.
    - **Reason:** UDP is often used in diagnostic tools like ping and traceroute, where low overhead and quick insights into network reachability and latency are more important than reliable delivery.

It's crucial to note that while UDP is suitable for these specific cases, applications in these scenarios need to handle potential packet loss or errors at the application layer if necessary. In situations where reliable data delivery is critical, protocols like TCP are more appropriate. The choice between UDP and TCP depends on the specific requirements of the application and the trade-offs between speed and reliability.

Q.15) Are both UDP and IP unreliable to the same degree? Why or why not?

UDP (User Datagram Protocol) and IP (Internet Protocol) operate at different layers of the networking stack, with IP functioning at the network layer (Layer 3) and UDP at the transport layer (Layer 4). Each protocol has its own characteristics regarding reliability, and they are unreliable to different degrees for different reasons.

1. **IP (Internet Protocol):**
    - IP is responsible for the routing and forwarding of packets across networks.
    - **Reliability:** IP is considered an unreliable, connectionless protocol. It provides a best-effort delivery service, but it does not guarantee packet delivery, packet order, or error detection.
    - **Reasons for Unreliability:**
        - IP is designed to be lightweight and efficient, and it does not include mechanisms for error recovery or acknowledgment.
        - Packets may be lost, duplicated, or delivered out of order without IP attempting to correct or notify the sender.
2. **UDP (User Datagram Protocol):**
    - UDP operates at the transport layer and is commonly used for simple, connectionless communication.
    - **Reliability:** Similar to IP, UDP is also considered an unreliable protocol. It does not guarantee reliable data delivery, sequencing, or error recovery.
    - **Reasons for Unreliability:**
        - UDP is designed to be lightweight and fast, making it suitable for real-time applications. However, this comes at the cost of reliability features.
        - There is no acknowledgment of received data, no retransmission of lost packets, and no flow control.

Differences in Unreliability:

- While both IP and UDP are unreliable in the sense that they do not provide guarantees regarding delivery or order of packets, the reasons for their unreliability differ.
- IP's unreliability is mainly due to its focus on packet routing and simplicity, lacking built-in mechanisms for error recovery or acknowledgment.

- UDP's unreliability is intentional, designed to be lightweight and fast for applications where occasional packet loss or out-of-order delivery is acceptable.

Use Cases:

- Both IP and UDP are well-suited for scenarios where low overhead and minimal processing delay are more critical than reliable delivery. Use cases such as real-time communication, streaming, and online gaming often leverage the simplicity and speed of UDP and the routing capabilities of IP.

Mitigation:

- Applications using UDP can implement their own error handling and recovery mechanisms at the application layer if reliability is essential for their specific use case.
- Higher-layer protocols, such as those built on top of UDP (e.g., application-layer protocols), may include additional features to address reliability concerns.

In summary, while both IP and UDP are considered unreliable, their unreliability is rooted in different aspects of network communication. IP is focused on routing, and UDP is designed for speed and simplicity. Applications need to consider the trade-offs and select protocols based on their specific requirements for reliability, latency, and overhead.

Chapter-02

TCP

Q.1) Introduce TCP as a protocol that provides reliable stream delivery service.

Transmission Control Protocol (TCP) is a core communication protocol at the transport layer of the Internet Protocol (IP) suite. It is designed to provide a reliable and connection-oriented stream delivery service for data transmission between two devices on a network. TCP ensures the secure and ordered delivery of data, making it suitable for applications where accuracy and completeness of information are crucial.

Key Characteristics of TCP:

1. **Reliable Communication:**
   - TCP guarantees the reliable delivery of data. It ensures that data sent from one device (sender) is received accurately and in the correct order by the other device (receiver). This reliability is achieved through various mechanisms, including acknowledgment, retransmission, and error checking.
2. **Connection-Oriented:**
   - TCP establishes a connection between the sender and receiver before the actual data transmission begins. This connection establishment involves a three-way handshake, where both parties exchange control information to set up the communication parameters.
3. **Full Duplex Communication:**
   - TCP supports full-duplex communication, meaning that data can be transmitted in both directions simultaneously. Each TCP connection consists of two separate streams, allowing for bidirectional data flow.
4. **Flow Control:**
   - TCP includes mechanisms for flow control to prevent the sender from overwhelming the receiver with data. The receiver can indicate its available buffer space, and the sender adjusts its transmission rate accordingly.
5. **Congestion Control:**
   - TCP is equipped with congestion control mechanisms to adapt to varying network conditions. It dynamically adjusts the transmission rate to avoid congestion, ensuring efficient and fair use of network resources.
6. **Segmentation and Reassembly:**
   - TCP breaks data into smaller units called segments for transmission and reassembles them at the receiving end. This segmentation helps optimize data transfer and enables the handling of data of different sizes.
7. **Acknowledgment and Retransmission:**

- TCP uses acknowledgments (ACKs) to confirm the receipt of data segments. If the sender does not receive an acknowledgment within a specified time (timeout), it retransmits the unacknowledged data to ensure reliable delivery.

8. **Connection Termination:**
    - TCP includes a connection termination process, allowing both parties to gracefully close the connection when the data exchange is complete. This involves a four-way handshake to ensure that all remaining data is exchanged before the connection is closed.

Use Cases of TCP:

TCP is widely used in various applications and services, including:

- **Web Browsing:** TCP is the underlying protocol for HTTP, the protocol used for web browsing.
- **Email:** SMTP (Simple Mail Transfer Protocol) and IMAP (Internet Message Access Protocol) use TCP for email communication.
- **File Transfer:** Protocols like FTP (File Transfer Protocol) use TCP for secure and reliable file transfers.
- **Remote Login:** Protocols like SSH (Secure Shell) use TCP for secure remote login sessions.

In summary, TCP is a reliable and connection-oriented protocol that ensures the secure and ordered delivery of data between devices on a network. Its features such as reliability, flow control, and congestion control make it well-suited for applications where accurate and complete data transmission is essential.

Q.2) Define TCP features and compare them with UDP features.

TCP (Transmission Control Protocol):

1. **Connection-Oriented:**
    - **TCP:** Establishes a connection between the sender and receiver before data transmission, involving a three-way handshake. It ensures a reliable, bidirectional communication stream.
2. **Reliable Delivery:**
    - **TCP:** Guarantees reliable and ordered delivery of data. It uses acknowledgment, retransmission, and sequencing mechanisms to ensure that data is received accurately and in the correct order.
3. **Full Duplex Communication:**
    - **TCP:** Supports full-duplex communication, allowing data to be transmitted in both directions simultaneously. It maintains separate streams for data flow in each direction.
4. **Flow Control:**

- **TCP:** Implements flow control mechanisms to prevent congestion and ensure efficient data transfer. The receiver can indicate its buffer availability, and the sender adjusts the transmission rate accordingly.

5. **Congestion Control:**
   - **TCP:** Dynamically adjusts the transmission rate to adapt to network conditions and prevent congestion. It includes congestion avoidance and congestion recovery mechanisms.
6. **Segmentation and Reassembly:**
   - **TCP:** Breaks data into segments for transmission and reassembles them at the receiving end. This segmentation optimizes data transfer and allows the handling of data of varying sizes.
7. **Acknowledgment and Retransmission:**
   - **TCP:** Uses acknowledgments (ACKs) to confirm the receipt of data segments. If an acknowledgment is not received within a specified time, the sender retransmits the unacknowledged data.
8. **Connection Termination:**
   - **TCP:** Includes a connection termination process, involving a four-way handshake. It ensures that all remaining data is exchanged before gracefully closing the connection.

UDP (User Datagram Protocol):

1. **Connectionless:**
   - **UDP:** Operates in a connectionless manner, without the need to establish a connection before data transmission.
2. **Unreliable Delivery:**
   - **UDP:** Does not guarantee reliable or ordered delivery of data. It does not use acknowledgment, retransmission, or sequencing mechanisms.
3. **No Flow Control:**
   - **UDP:** Lacks flow control mechanisms. The sender transmits data without adjusting the rate based on the receiver's buffer availability.
4. **No Congestion Control:**
   - **UDP:** Does not have built-in congestion control mechanisms. It relies on the application to manage potential congestion.
5. **No Segmentation/Reassembly:**
   - **UDP:** Sends data as a single datagram without breaking it into smaller units. It does not perform segmentation and reassembly like TCP.
6. **No Acknowledgment/Retransmission:**
   - **UDP:** Does not use acknowledgments for received data or retransmission of lost packets. It assumes that occasional packet loss is acceptable for certain applications.
7. **No Connection Termination:**
   - **UDP:** Lacks a connection termination process. The communication ends when the data is sent, without a formalized closing handshake.

Comparison:

- **Reliability:**
  - **TCP:** Reliable and ensures accurate and ordered data delivery.
  - **UDP:** Unreliable and does not guarantee reliable or ordered data delivery.
- **Connection Establishment:**
  - **TCP:** Connection-oriented with a three-way handshake.
  - **UDP:** Connectionless, with no formal connection establishment.
- **Flow and Congestion Control:**

- **TCP:** Implements flow control and congestion control mechanisms.
- **UDP:** Lacks flow and congestion control, relying on the application layer.

- **Overhead:**
  - **TCP:** Higher overhead due to the additional mechanisms for reliability, flow control, and connection management.
  - **UDP:** Lower overhead, making it more lightweight.
- **Use Cases:**
  - **TCP:** Suitable for applications requiring reliable and ordered data delivery, such as web browsing, email, and file transfer.
  - **UDP:** Suited for real-time applications, live streaming, online gaming, and scenarios where low latency is crucial, and occasional packet loss is acceptable.

In summary, TCP and UDP have distinct features and are chosen based on the specific requirements of applications. TCP is favored for scenarios where reliable data delivery is critical, while UDP is chosen for real-time applications that prioritize low latency over reliability.

Q.3) show how TCP provides a connection-oriented service, and show the segments exchanged during connection establishment and connection termination phases.

Q.4) discuss the state transition diagram for TCP and discuss some scenarios

Q.5) introduce windows in TCP that are used for flow and error control.

In the context of TCP (Transmission Control Protocol), windows play a crucial role in both flow control and error control. TCP uses a sliding window mechanism to manage the flow of data between the sender and the receiver, ensuring efficient and reliable communication over a network. Let's explore how windows are employed for flow and error control in TCP:

Flow Control:

Flow control in TCP is designed to prevent the sender from overwhelming the receiver with too much data. It ensures that the sender transmits data at a rate that the receiver can handle. The sliding window mechanism is fundamental to TCP flow control:

1. **Sender's Window (Advertised Window):**
   - The receiver advertises its available buffer space using a window size in the TCP header. This window size, often referred to as the "advertised window" or "receiver window," represents the number of bytes the sender is allowed to transmit before waiting for an acknowledgment.
2. **Sliding Window:**
   - The sender maintains a sliding window that represents the range of acceptable sequence numbers. It can only send data within this window. As the sender receives acknowledgments and the receiver's advertised window updates, the sliding window adjusts accordingly.
3. **Adjusting Transmission Rate:**
   - The sender adjusts its transmission rate based on the size of the receiver's window. If the window size is small, the sender limits the amount of unacknowledged data in transit. If the window is large, the sender can transmit more data before waiting for acknowledgments.
4. **Dynamic Flow Control:**
   - The sliding window allows for dynamic adaptation to changing network conditions. It prevents congestion and ensures that data is transmitted at a rate compatible with the receiver's capacity.

Error Control:

Error control in TCP involves mechanisms to detect and recover from errors that may occur during data transmission. The sliding window plays a role in ensuring the accurate delivery of data:

1. **Positive Acknowledgments (ACKs):**
   - The receiver sends positive acknowledgments (ACKs) to confirm the correct receipt of data. The acknowledgment number indicates the next expected sequence number.
2. **Retransmission:**
   - If the sender does not receive an acknowledgment for a certain data segment within a specified time (timeout), it assumes that the segment was lost or corrupted. The sender then retransmits the unacknowledged data.
3. **Selective Acknowledgments (SACKs):**
   - TCP can use selective acknowledgments to inform the sender about specific segments that were received out of order. This allows the sender to retransmit only the necessary segments, improving efficiency.
4. **Sequence Numbers:**
   - The sender and receiver use sequence numbers to identify and order segments. The sliding window ensures that the sender only sends segments within the current window, facilitating accurate acknowledgment and retransmission.

Summary:

The sliding window mechanism in TCP is a dynamic and adaptive system that serves both flow control and error control purposes. It optimizes data transmission rates, prevents congestion, and ensures the reliable and ordered delivery of data in the presence of errors or packet loss. The use of sequence numbers, acknowledgment numbers, and window sizes allows TCP to maintain synchronization between sender and receiver, leading to effective and robust communication.

Q.6) Discuss how TCP implements flow control in which the receive window controls the size of the send window.

TCP implements flow control using a sliding window mechanism, where the receive window size dynamically controls the size of the send window. This mechanism is crucial for ensuring that the sender does not overwhelm the receiver with too much data, optimizing data transmission rates and preventing congestion. Here's how TCP achieves flow control through the interaction of the receive window and the send window:

Sliding Window Basics:

1. **Receive Window (Advertised Window):**
   - The receiver advertises its available buffer space to the sender using a window size value in the TCP header. This window size, often referred to as the "receive window" or "advertised window," indicates the amount of space available in the receiver's buffer.
2. **Send Window:**
   - The sender maintains a sliding window that represents the range of acceptable sequence numbers for transmitted data. The size of this window is determined by the receive window advertised by the receiver.

Flow Control Steps:

1. **Sender Sends Data Within the Window:**

- The sender can only transmit data that falls within the range of the current sliding window. The window's size is initially set based on the receiver's advertised window.

2. **Receiver Acknowledges Received Data:**
   - As the receiver successfully receives data, it acknowledges the segments and updates its advertised window based on the available buffer space. The acknowledgment includes the receiver's current window size.
3. **Dynamic Window Size Adjustment:**
   - The sliding window at the sender's side dynamically adjusts based on the acknowledgment and the updated receive window size. If the receiver's window size increases, the sender can transmit more data before expecting further acknowledgments.
4. **Sender Adapts to Receiver's Capacity:**
   - The sender constantly monitors the receive window information provided by the receiver. It adjusts its transmission rate based on the size of the window, preventing congestion and ensuring that it does not overwhelm the receiver.

Key Concepts:

- **Receiver Advertised Window:**
  - The receiver informs the sender about the available buffer space through the advertised window. This window size acts as a guidance for the sender.
- **Sliding Window Adjustment:**
  - The sliding window at the sender's side adjusts dynamically based on acknowledgments and the advertised window. It ensures that the sender only sends data within the receiver's capacity.
- **Preventing Overload:**
  - Flow control prevents the sender from transmitting data faster than the receiver can handle. This prevents buffer overflow at the receiver and optimizes the overall performance of the communication.

Benefits of Flow Control in TCP:

1. **Preventing Congestion:**
   - Adjusting the transmission rate based on the receive window helps prevent congestion in the network and ensures that data is transmitted at a rate compatible with the receiver's capacity.
2. **Optimizing Resource Usage:**
   - By controlling the flow of data, TCP optimizes the usage of network resources and avoids unnecessary delays or data loss.
3. **Dynamic Adaptation:**
   - The sliding window mechanism allows for dynamic adaptation to changing network conditions, ensuring efficient data transfer.

In summary, the receive window in TCP serves as a critical element in the flow control mechanism. It enables the sender to adapt its transmission rate to the receiver's capacity, preventing overload and optimizing the efficiency of data transfer in a reliable and ordered manner.

Q.7) Discuss error control and FSMs used by TCP during the data transmission phase.

TCP (Transmission Control Protocol) employs various error control mechanisms during the data transmission phase to ensure reliable and accurate delivery of data. Additionally, TCP utilizes Finite State Machines (FSMs) to manage the different states and transitions that occur during the data transmission process. Let's discuss both aspects:

Error Control Mechanisms:

1. **Positive Acknowledgments (ACKs):**
   - TCP relies on positive acknowledgments (ACKs) to confirm the successful receipt of data. The receiver sends an ACK to acknowledge the receipt of each TCP segment. If an ACK is not received within a specified time (timeout), the sender assumes that the segment was lost or corrupted and initiates retransmission.
2. **Retransmission:**
   - If the sender does not receive an acknowledgment (ACK) for a transmitted segment within a certain timeframe, it assumes that the segment was lost or corrupted in transit. The sender then retransmits the unacknowledged data segment.
3. **Selective Acknowledgments (SACKs):**
   - TCP supports Selective Acknowledgments, allowing the receiver to inform the sender about specific segments that were received out of order. This enables the sender to retransmit only the necessary segments, improving efficiency.
4. **Timeouts and Retransmission Timer:**
   - TCP uses a retransmission timer to determine when to retransmit unacknowledged data. If an acknowledgment is not received within the timeout period, the sender retransmits the unacknowledged segment.
5. **Window-based Flow Control:**
   - The sliding window mechanism, which is also used for flow control, indirectly contributes to error control. If the receiver's window is small, the sender's transmission rate is limited, reducing the likelihood of congestion and transmission errors.

Finite State Machines (FSMs):

TCP employs Finite State Machines to model the different states and transitions that occur during the data transmission phase. A simplified representation of the TCP FSM during data transmission includes the following states:

1. **LISTEN:**
   - Initial state where the connection is waiting for a connection request from the remote peer.
2. **SYN-SENT:**
   - The state where the client has initiated a connection and sent a SYN (synchronize) segment.
3. **SYN-RECEIVED:**
   - The state where the server has received a SYN segment and sends its own SYN-ACK segment in response.
4. **ESTABLISHED:**
   - The state where the connection is established, and data transmission can occur bidirectionally.
5. **FIN-WAIT-1:**
   - The state where the sender has initiated a connection termination by sending a FIN (finish) segment.
6. **FIN-WAIT-2:**
   - The state where the sender waits for an acknowledgment of its FIN from the receiver.
7. **CLOSE-WAIT:**
   - The state where the receiver has received a FIN and initiated a connection termination.
8. **LAST-ACK:**
   - The state where the sender acknowledges the receipt of the receiver's FIN, completing the connection termination.
9. **TIME-WAIT:**

- The state where the connection waits for a predefined time to ensure that all segments in transit are either acknowledged or discarded before fully closing the connection.

These states and transitions allow TCP to manage the entire lifecycle of a connection, including establishment, data transmission, and termination, while handling potential errors and retransmissions.

In summary, TCP employs error control mechanisms such as positive acknowledgments, retransmission, selective acknowledgments, and timers to ensure the reliable delivery of data. Finite State Machines model the different states and transitions during data transmission, facilitating the orderly management of connections and addressing potential errors that may occur during the communication process.

Q.8) Discuss how TCP controls the congestion in the network using different strategies.

TCP (Transmission Control Protocol) employs various strategies to control congestion in the network. Congestion control is crucial for preventing network congestion, optimizing resource utilization, and ensuring fair and efficient data transfer. TCP uses mechanisms such as slow start, congestion avoidance, fast retransmit, and fast recovery to manage congestion. Let's discuss these strategies:

1. Slow Start:

- **Description:** Slow start is an initial phase where the sender gradually increases its transmission rate. It starts by sending a small number of segments and doubles its transmission rate for each successful round-trip time until a congestion event occurs.
- **Purpose:** Helps avoid triggering congestion prematurely when the connection begins.

2. Congestion Avoidance:

- **Description:** After the slow start phase, the sender enters congestion avoidance, where it increases the transmission rate more gradually, adding one segment per round-trip time.
- **Purpose:** Aims to reach an optimal transmission rate without triggering congestion.

3. Fast Retransmit:

- **Description:** When the sender detects a packet loss (based on duplicate acknowledgments), it assumes congestion and retransmits the missing segment without waiting for a timeout.
- **Purpose:** Accelerates the retransmission of lost segments to quickly recover from congestion events.

4. Fast Recovery:

- **Description:** In conjunction with fast retransmit, fast recovery allows the sender to continue sending new segments (rather than halving the window size) after detecting a packet loss.
- **Purpose:** Maintains a reasonable transmission rate during congestion events, minimizing the impact on throughput.

5. TCP Tahoe and TCP Reno:

- **TCP Tahoe:** Implements slow start, congestion avoidance, and fast retransmit but lacks fast recovery.
- **TCP Reno:** Extends TCP Tahoe with fast recovery, allowing the sender to maintain a higher sending rate after detecting packet loss.
- **Purpose:** Enhances the ability to recover from congestion events more efficiently.

6. Explicit Congestion Notification (ECN):

- **Description:** ECN allows routers to notify the sender of impending congestion by setting a flag in the IP header. The sender reacts by reducing its transmission rate.
- **Purpose:** Provides a proactive approach to congestion control, allowing routers to signal congestion before packet loss occurs.

7. Random Early Detection (RED):

- **Description:** RED is a router-based strategy that selectively drops packets before a queue becomes congested. It uses probabilistic dropping to signal congestion to the sender.
- **Purpose:** Aims to prevent congestion collapse by encouraging the sender to reduce its transmission rate proactively.

8. TCP Vegas:

- **Description:** TCP Vegas uses round-trip time measurements to detect congestion before packet loss occurs. It adjusts its transmission rate based on the observed delay.
- **Purpose:** Provides a more proactive congestion control mechanism, reducing the impact of congestion on network performance.

9. TCP NewReno:

- **Description:** TCP NewReno enhances TCP Reno by addressing some limitations in the fast recovery phase, allowing it to recover more gracefully from multiple packet losses.
- **Purpose:** Improves the efficiency of congestion recovery in scenarios with multiple consecutive packet losses.

Summary:

TCP employs a combination of strategies, including slow start, congestion avoidance, fast retransmit, fast recovery, ECN, RED, and specific TCP variants (e.g., Reno, NewReno, Vegas), to control congestion in the network. These mechanisms collectively work to adapt the sender's transmission rate based on observed network conditions, avoiding congestion collapse and optimizing the overall performance of TCP connections in dynamic and varying network environments.

Q.9) list and explain the purpose of each timer in TCP.

TCP (Transmission Control Protocol) utilizes various timers to manage different aspects of its operation, including connection establishment, data transmission, and error recovery. Each timer serves a specific purpose in regulating the behavior of TCP. Here is a list of commonly used timers in TCP, along with their purposes:

1. Retransmission Timer:

- **Purpose:** The retransmission timer is used to determine when to retransmit a segment that has not been acknowledged within a specified time. If an acknowledgment is not received for a transmitted segment before the timer expires, the sender assumes packet loss and initiates retransmission.

2. Persistence Timer:

- **Purpose:** The persistence timer is used when the sender's window size becomes zero during the congestion avoidance phase. If the sender receives no ACKs for a certain duration, it triggers the persistence timer, allowing the sender to probe for the receiver's window to open.

3. Keep-Alive Timer:

- **Purpose:** The keep-alive timer is used to periodically check the liveliness of a connection. If no data is exchanged within a specific interval, a keep-alive probe is sent. If the peer does not respond, the connection may be considered idle or possibly terminated.

4. Time-Wait Timer:

- **Purpose:** The time-wait timer is activated when a connection is closed. It ensures that the connection remains in the TIME-WAIT state for a sufficient duration to handle delayed or duplicate segments. Once the timer expires, the connection is fully closed.

5. Persist Timer:

- **Purpose:** The persist timer is associated with the persistence mechanism. It is used to retransmit a single byte of data to keep the connection alive when the window size is zero due to a zero window advertisement by the receiver.

6. Syn-Backoff Timer:

- **Purpose:** During the connection establishment phase, the syn-backoff timer is used to control the rate at which connection attempts are retried. It regulates the interval between successive SYN retransmissions during the three-way handshake.

7. Fin-Wait-2 Timer:

- **Purpose:** After sending a FIN (finish) segment, the Fin-Wait-2 timer is activated. It ensures that the connection remains in the FIN-WAIT-2 state for a certain duration to allow for acknowledgment of the FIN from the other end.

8. Maximum Segment Lifetime (MSL) Timer:

- **Purpose:** The MSL timer defines the maximum time a TCP segment can exist in the network. It is twice the maximum round-trip time and is used to prevent old segments from interfering with new connections.

9. Delayed ACK Timer:

- **Purpose:** The delayed ACK timer introduces a short delay before sending an acknowledgment in response to received data. This timer helps reduce the number of ACK segments sent and improves efficiency.

10. Zero Window Probe Timer:

- **Purpose:** When the sender encounters a zero receive window from the receiver, it may use the zero window probe timer to periodically send a small amount of data to probe for the receiver's readiness to accept more data.

Summary:

Timers in TCP play a crucial role in managing various aspects of connection establishment, data transmission, error recovery, and connection termination. They ensure the reliable and efficient operation of TCP in varying network conditions while preventing issues such as congestion collapse and connection instability.

Q.10) discuss options in TCP and show how TCP can provide selective acknowledgment using the SACK option.

TCP (Transmission Control Protocol) options provide a way to extend the functionality of the protocol beyond its basic features. One such extension is the Selective Acknowledgment (SACK) option, which enhances TCP's acknowledgment mechanism by allowing the receiver to inform the sender about specific segments that have been received out of order or lost. This helps the sender to selectively retransmit only the necessary segments, improving overall efficiency and reducing retransmission overhead.

Selective Acknowledgment (SACK) Option:

The SACK option is defined in RFC 2018 and is used to convey information about the received segments to the sender. It allows the receiver to acknowledge non-contiguous blocks of data, indicating which portions of the transmitted data have been successfully received.

Structure of SACK Option:

The SACK option is part of the TCP header's options field. It includes one or more SACK blocks, each specifying a range of contiguous received segments. The SACK option is negotiated during the connection establishment phase.

The structure of a SACK option looks like this:

```
+---------------------------------+
| Kind | Length |  Left Edge | Right Edge |
+---------------------------------+
```

- **Kind (1 byte):** Specifies the option kind (SACK).
- **Length (1 byte):** Indicates the total length of the option in bytes.
- **Left Edge (4 bytes):** Specifies the left edge of a SACK block.
- **Right Edge (4 bytes):** Specifies the right edge of a SACK block.

How SACK Works:

1. **Receiver Observes Out-of-Order or Lost Segments:**
   - If the receiver observes out-of-order or lost segments, it uses the SACK option to inform the sender about the specific segments that have been received successfully.
2. **Sender Sends Multiple Segments:**
   - The sender transmits multiple segments within a single window, and the receiver acknowledges the received segments using the SACK option.
3. **SACK Blocks in Acknowledgment:**
   - The acknowledgment packet sent by the receiver includes SACK blocks, specifying the ranges of successfully received segments.
4. **Sender Reacts to SACK Information:**

- Upon receiving the acknowledgment with SACK blocks, the sender can selectively retransmit only the segments that fall within the gaps identified by the SACK information.

Example SACK Option in TCP Header:

Suppose the receiver has successfully received segments from 1 to 100 and 150 to 200, but segments 101 to 149 were lost or arrived out of order. The SACK option in the acknowledgment could look like this:

```
+---------------------------+
| Kind | Length | Left | Right |
+---------------------------+
| SACK |   8    |  101 |  200  |
+---------------------------+
```

In this example, the SACK option indicates that segments 101 to 200 were successfully received, while segments 1 to 100 and 150 to 200 need to be retransmitted.

Benefits of SACK:

- **Efficiency:** SACK improves efficiency by allowing the sender to retransmit only the necessary segments rather than retransmitting the entire window.
- **Reduced Retransmission Overhead:** By avoiding unnecessary retransmissions, SACK helps reduce the overall overhead associated with TCP error recovery.
- **Faster Recovery from Packet Loss:** SACK enables faster recovery from packet loss by pinpointing the specific segments that need to be retransmitted.

Limitations:

- **Not Universally Supported:** While widely supported, not all TCP implementations may support the SACK option.
- **Potential for Abuse:** In certain situations, malicious use of SACK information could lead to resource exhaustion. Implementations need to include safeguards against abuse.

In summary, the Selective Acknowledgment (SACK) option in TCP enhances the acknowledgment mechanism by allowing the receiver to inform the sender about specific segments that have been received successfully. This selective acknowledgment enables more efficient error recovery and reduced retransmission overhead.

Q.11) An IP datagram is carrying a TCP segment destined for address 130.14.16.17. The destination port address is corrupted and it arrives at destination 130.14.16.19. How does the receiving TCP react to this error?

When an IP datagram carrying a TCP segment arrives at the destination, and the destination port address is corrupted or incorrect, the receiving TCP layer will not be able to process the segment correctly. The destination port is a crucial field in the TCP header, specifying the application or service to which the segment should be delivered.

In such a scenario, the receiving TCP will take specific actions in response to the error:

1. **Discard the Segment:**
   - The receiving TCP will recognize the corrupted destination port and determine that the segment is not intended for the application or service running on the port indicated in the corrupted field.
2. **Generate an ICMP Port Unreachable Message:**
   - The receiving TCP layer will generate an ICMP (Internet Control Message Protocol) "Port Unreachable" message. This ICMP message is sent back to the source IP address to inform the sender that the destination port specified in the TCP segment is unreachable or not valid.
3. **Notify the Higher-Layer Protocol:**
   - The receiving TCP layer will notify the higher-layer protocol (the protocol using the services of TCP, e.g., an application or another layer) about the error. The higher-layer protocol may take further action based on this notification.
4. **No TCP Connection Establishment:**
   - If the corrupted destination port is part of the initial three-way handshake (e.g., in the SYN segment), the receiving TCP will not establish a connection. The corrupted or invalid port prevents the proper establishment of a TCP connection.
5. **No Data Delivery to the Application:**
   - As the destination port is corrupted, the TCP layer will not deliver the data portion of the segment to the corresponding application or service running on the destination port.

In summary, when the receiving TCP detects a corrupted or incorrect destination port in an arriving TCP segment, it discards the segment, generates an ICMP "Port Unreachable" message, notifies the higher-layer protocol, and takes actions to prevent the establishment of a TCP connection or the delivery of data to the application or service associated with the corrupted port. The ICMP message serves as feedback to the sender, indicating that the specified destination port is unreachable.

Final answer:

The receiving **TCP** reacts to the error by sending a TCP RST segment back to the sender, indicating that the destination port is unreachable or closed.

Explanation:

When an **IP datagram** carrying a TCP segment arrives at its destination, the *receiving TCP* checks the *destination port address* to determine which application or service should receive the data. If the destination port address is corrupted or incorrect, the receiving TCP will send a TCP RST (Reset) segment back to the sender.

The **TCP protocol** uses a 16-bit port number field in the TCP header to identify the destination port. If the destination port address in the TCP segment does not match any open ports on the receiving system, the receiving TCP will send a *TCP RST segment* back to the sender. This RST segment indicates that the destination port is unreachable or closed.

The sender will then interpret this RST segment as an error and take appropriate action, such as retransmitting the data or terminating the connection.

Q.12) UDP is a message-oriented protocol. TCP is a byte-oriented protocol. If an appli- cation needs to protect the boundaries of its message, which protocol should be used, UDP or TCP?

If an application needs to protect the boundaries of its message, TCP would be a more suitable choice than UDP. The reason for this lies in the fundamental differences between UDP (User Datagram Protocol) and TCP (Transmission Control Protocol) regarding their data transmission characteristics.

UDP (User Datagram Protocol):

1. **Message-Oriented:**
   - UDP is considered a message-oriented protocol. Each UDP packet is treated as an independent message, and there is no concept of a continuous stream of data.
2. **No Built-in Message Boundaries:**
   - UDP does not provide built-in mechanisms for defining or maintaining message boundaries. It sends data in the form of datagrams, and the receiver must handle each datagram independently.
3. **Unreliable:**
   - UDP is a connectionless and unreliable protocol. It does not guarantee the delivery or order of packets, and there is no flow control or error recovery mechanism.

TCP (Transmission Control Protocol):

1. **Byte-Oriented:**
   - TCP, on the other hand, is a byte-oriented protocol. It provides a continuous and reliable stream of data, and the sender and receiver communicate in terms of bytes rather than discrete messages.
2. **Maintains Message Boundaries:**
   - TCP includes mechanisms for maintaining message boundaries. It uses a stream of bytes, but the sender and receiver can establish and maintain logical message boundaries through higher-layer protocols or application-specific framing.
3. **Reliable and Ordered Delivery:**
   - TCP ensures reliable and ordered delivery of data. It includes error checking, acknowledgment mechanisms, and retransmission of lost data to guarantee the correct and ordered reception of bytes.

Recommendation:

If an application needs to protect the boundaries of its message, TCP is the preferred choice. The continuous stream of data in TCP can be logically segmented into messages at the application layer. This segmentation can be achieved through framing, delimiters, or other application-specific methods.

Using TCP allows the application to enjoy the benefits of reliable, ordered delivery, while still having the flexibility to structure and protect its messages within the stream of data. In contrast, UDP lacks the inherent features needed for maintaining message boundaries and reliable communication.

In summary, if message boundaries need to be protected and reliable delivery is crucial, TCP is the more appropriate choice. The application layer can handle message framing within the byte-oriented TCP stream to ensure that the boundaries of messages are preserved.

Q.13) if the value of HLEN is 0111, how many bytes of option are included in the segment?

In the context of the TCP (Transmission Control Protocol) header, the `HLEN` (Header Length) field indicates the size of the TCP header in 4-byte words. The `HLEN` field is 4 bits long and represents the number of 4-byte words in the TCP header, including any options.

Given that the value of `HLEN` is 0111, let's convert this binary value to decimal to determine the size of the TCP header in bytes:

0111 in binary = 7 in decimal

So, the value 0111 in the `HLEN` field corresponds to a TCP header size of 7 * 4 bytes = 28 bytes. This includes the standard 20-byte TCP header and an additional 8 bytes of options (28 - 20 = 8).

Therefore, if the value of `HLEN` is 0111, there are 8 bytes of options included in the TCP segment.

Q.14) What can you say about the TCP segment in which the value of the control field is one of the following:
a. 000000 b. 000001 c. 010001 d. 000100 e. 000010 f. 010010

In TCP (Transmission Control Protocol), the control field is represented by the 6 bits within the TCP header that control various aspects of the segment's behavior. These 6 bits are used for flags, often referred to as control flags or control bits. Each bit represents a specific control function. The control field is also known as the Flags field.

Here's the breakdown of the 6 bits in the control field:

URG | ACK | PSH | RST | SYN | FIN

- URG (Urgent): Urgent pointer field significant
- ACK (Acknowledgment): Acknowledgment field significant
- PSH (Push): Push Function
- RST (Reset): Reset the connection
- SYN (Synchronize): Synchronize sequence numbers
- FIN (Finish): No more data from the sender

Let's analyze the provided values for the control field:

a. **000000:**

- This represents a TCP segment with no control flags set. It is a normal data segment without any special flags.

b. **000001:**

- This represents a TCP segment with only the FIN (Finish) flag set. It indicates that the sender has finished sending data.

c. **010001:**

- This represents a TCP segment with the SYN (Synchronize) and FIN (Finish) flags set. It could be part of the connection establishment or termination process.

d. **000100:**

- This represents a TCP segment with only the ACK (Acknowledgment) flag set. It indicates that the acknowledgment field is significant.

e. **000010:**

- This represents a TCP segment with only the SYN (Synchronize) flag set. It is typically used during the initial stages of a connection to synchronize sequence numbers.

f. **010010:**

- This represents a TCP segment with the SYN (Synchronize) and ACK (Acknowledgment) flags set. It is part of the three-way handshake during connection establishment.

In summary:

- Options (a) and (d) indicate normal data segments.
- Option (b) indicates the sender has finished sending data (FIN).
- Option (c) indicates a combination of SYN and FIN, which is uncommon but could be used in certain scenarios.
- Option (e) indicates the initiation of a connection (SYN).
- Option (f) indicates the acknowledgment of a SYN during the connection establishment process.

Understanding these flags is crucial for interpreting the behavior of TCP segments and their roles in connection establishment, data transfer, and connection termination.

The following is a dump of a TCP header in hexadecimal format. a. What is the source port number? b. What is the destination port number? c. What the sequence number? d. What is the acknowledgment number? e. What is the length of the header? f. What is the type of the segment? g. What is the window size

ChatGPT

ChatGPT

To analyze the TCP header dump, we need to interpret the hexadecimal values and extract the relevant information. A typical TCP header consists of various fields, including source port, destination port, sequence number, acknowledgment number, header length, control flags, and window size. Let's break down the given hexadecimal values:

4500003C1E3900007011672A

a. Source Port Number:

The source port number is the first 2 bytes (16 bits) of the TCP header.

45 00 | 003C 1E39 0000 7011 1672 ...

^ ^ Source Port

So, the source port number is `003C` in hexadecimal, which is `60` in decimal.

b. Destination Port Number:

The destination port number is the next 2 bytes (16 bits) after the source port.

... 003C | 1E39 0000 7011 1672 ...

^ ^ Destination Port

So, the destination port number is `1E39` in hexadecimal, which is `7737` in decimal.

c. Sequence Number:

The sequence number is the next 4 bytes (32 bits) after the destination port.

... 1E39 | 0000 7011 1672 ...

^ Sequence Number

So, the sequence number is `00007011` in hexadecimal, which is `28689` in decimal.

d. Acknowledgment Number:

The acknowledgment number is the next 4 bytes (32 bits) after the sequence number.

... 00007011 | 1672 ...

^ Acknowledgment Number

So, the acknowledgment number is `1672` in hexadecimal, which is `5746` in decimal.

e. Length of the Header:

The header length is represented by the Data Offset field in the TCP header, which is part of the first byte.

45 | 00 003C 1E39 0000 7011 1672 ...

^ Data Offset (4 bits)

The Data Offset field indicates the number of 4-byte words in the header. In this case, the value is `4`, so the header length is `4 * 4 = 16` bytes.

f. Type of the Segment (Control Flags):

The control flags are represented by the next 2 bytes (16 bits) after the acknowledgment number.

... 1672 | ...

^ Control Flags

The control flags include various bits representing different functions (URG, ACK, PSH, RST, SYN, FIN). To determine the specific flags, we need to convert `1672` to binary:

0001 0110 0111 0010

The flags are:

- URG: 0
- ACK: 1
- PSH: 1
- RST: 0
- SYN: 1
- FIN: 0

So, the type of the segment is a TCP segment with the SYN and PSH flags set.

g. Window Size:

The window size is the next 2 bytes (16 bits) after the control flags.

... 1672 | ...

^ Window Size

So, the window size is `1672` in hexadecimal, which is `5746` in decimal.

In summary:

a. Source Port Number: 60

b. Destination Port Number: 7737

c. Sequence Number: 28689

d. Acknowledgment Number: 5746

e. Length of the Header: 16 bytes

f. Type of the Segment: SYN, PSH

g. Window Size: 5746

SCTP

Q.1) introduce SCTP as a new transport-layer protocol?

Stream Control Transmission Protocol (SCTP) is a robust and versatile transport-layer protocol that provides a reliable and message-oriented communication service between two endpoints in a network. Unlike its counterparts, such as Transmission Control Protocol (TCP) and User Datagram Protocol (UDP), SCTP offers a unique set of features designed to address specific challenges in modern communication networks.

Key features of SCTP include:

1. **Message-Oriented Communication:** SCTP breaks data into messages, allowing for independent and ordered delivery of messages between endpoints. This makes it well-suited for applications that require the preservation of message boundaries.
2. **Multi-Homing:** SCTP supports multiple network paths between two endpoints, enabling it to adapt to changing network conditions. This feature enhances reliability and fault tolerance by allowing communication to continue even if one path becomes unavailable.
3. **Multi-Stream Capabilities:** SCTP enables the concurrent transmission of multiple streams of messages between endpoints. Each stream operates independently, providing improved performance and flexibility for applications that require simultaneous data transfer for different purposes.
4. **Connection-Oriented and Connectionless Services:** SCTP can operate in both connection-oriented and connectionless modes, providing flexibility to meet the requirements of various applications. In connection-oriented mode, SCTP establishes a reliable, ordered, and flow-controlled connection, while in connectionless mode, it behaves like UDP, delivering messages independently.
5. **Checksum and Verification Mechanisms:** SCTP includes built-in checksums and verification mechanisms to ensure the integrity of transmitted data. This enhances the protocol's reliability and security.
6. **Flow Control:** SCTP incorporates mechanisms for flow control, preventing congestion and ensuring efficient data transfer between endpoints.
7. **Adaptation to Network Changes:** SCTP is designed to adapt to changes in network topology, making it well-suited for mobile and wireless environments. It can dynamically adjust to variations in network conditions, enhancing its performance in diverse scenarios.

SCTP is particularly valuable for applications that demand a balance between reliability, flexibility, and performance. It has found applications in telecommunication systems, Voice over IP (VoIP), and other real-time communication services where its unique features provide advantages over traditional transport protocols like TCP and UDP.

Q.2) discuss SCTP services and compare them with TCP.

Stream Control Transmission Protocol (SCTP) and Transmission Control Protocol (TCP) are both transport-layer protocols, but they exhibit differences in terms of services and features. Let's discuss SCTP services and compare them with TCP:

SCTP Services:

1. **Message-Oriented Communication:**
    - SCTP is message-oriented, preserving message boundaries during transmission. It ensures that messages sent by an application at one end are received as complete messages by the application at the other end.
    - In contrast, TCP provides a stream-oriented service, where data is treated as a continuous stream of bytes, and there are no inherent message boundaries.
2. **Multi-Stream Capabilities:**
    - SCTP supports the simultaneous transmission of multiple independent streams between the same pair of endpoints. Each stream operates independently and can be used for different purposes.
    - TCP, on the other hand, does not inherently support the notion of multiple streams. Any parallelism in data transmission would need to be managed by the application layer.
3. **Multi-Homing:**
    - SCTP allows endpoints to have multiple IP addresses, providing redundancy and fault tolerance. If one network path fails, communication can seamlessly switch to an alternate path.
    - TCP typically relies on a single IP address and may need additional protocols or mechanisms (e.g., Multipath TCP) to achieve similar redundancy.
4. **Connection-Oriented and Connectionless Services:**
    - SCTP can operate in both connection-oriented and connectionless modes. In connection-oriented mode, it establishes a reliable, ordered, and flow-controlled connection. In connectionless mode, it operates similarly to UDP, delivering messages independently.
    - TCP is primarily connection-oriented, ensuring reliable and ordered delivery of data.
5. **Flow Control:**
    - SCTP includes built-in flow control mechanisms to prevent congestion and ensure efficient data transfer.
    - TCP also has flow control mechanisms, but SCTP's per-stream flow control allows for more granular control over the data flow.
6. **Adaptation to Network Changes:**

- SCTP is designed to adapt to changes in network conditions, making it suitable for mobile and wireless environments. It can dynamically adjust to variations in network topology.
- While TCP can adapt to network conditions, SCTP's specific design features make it more resilient to changes, especially in environments with multiple network paths.

Comparison with TCP:

- **Reliability:**
  - Both SCTP and TCP provide reliable, connection-oriented communication. However, SCTP's per-stream acknowledgment allows for more efficient handling of retransmissions.
- **Message Boundaries:**
  - SCTP maintains message boundaries, making it easier for applications that require distinct messages. TCP, being stream-oriented, lacks inherent message boundaries.
- **Connection Modes:**
  - SCTP supports both connection-oriented and connectionless modes, providing flexibility. TCP is primarily connection-oriented.
- **Multi-Stream and Multi-Homing:**
  - SCTP excels in scenarios where multiple streams or multiple network paths are beneficial. TCP may require additional mechanisms for achieving similar functionality.
- **Adaptability:**
  - SCTP is designed to adapt to changing network conditions, making it well-suited for dynamic environments. TCP is more static in comparison.

In summary, SCTP's unique features, such as message-oriented communication, multi-stream capabilities, and multi-homing support, make it a suitable choice for applications with specific requirements that TCP may not fully address. The choice between SCTP and TCP depends on the specific needs of the application and the characteristics of the network environment.

Q.3) list and explain different packet types used in SCTP and discuss the purpose and of each field in each packet.

Stream Control Transmission Protocol (SCTP) uses several packet types to manage communication between endpoints. Each packet type serves a specific purpose in the SCTP protocol. Here are the main SCTP packet types along with their respective fields:

1. **Data Packet:**
   - **Purpose:** Carries user data between endpoints.

- **Fields:**
    - **Source Port:** Source port number.
    - **Destination Port:** Destination port number.
    - **Verification Tag:** Helps identify the association to which the packet belongs.
    - **Checksum:** Used for error-checking.
    - **Chunk Flags:** Indicate the presence of control chunks.
    - **Payload Data:** Carries user data.

2. **Initiation Packet (INIT):**
    - **Purpose:** Initiates the association setup between two endpoints.
    - **Fields:**
        - **Source Port:** Source port number.
        - **Destination Port:** Destination port number.
        - **Verification Tag:** Set to 0 during association initiation.
        - **Advertised Receiver Window Credit:** Indicates the size of the receiver's buffer.
        - **Number of Outbound Streams:** Maximum number of outbound streams the sender can support.
        - **Initial TSN (Transmission Sequence Number):** Starting point for the sender's TSN.
        - **Optional Parameters:** Additional parameters for negotiation.
3. **Initiation Acknowledgment Packet (INIT-ACK):**
    - **Purpose:** Acknowledges the initiation and confirms association setup.
    - **Fields:**
        - **Source Port:** Source port number.
        - **Destination Port:** Destination port number.
        - **Verification Tag:** Copied from INIT packet.
        - **Advertised Receiver Window Credit:** Indicates the size of the receiver's buffer.
        - **Number of Outbound Streams:** Maximum number of outbound streams the sender can support.
        - **Initial TSN:** Starting point for the sender's TSN.
        - **State Cookie:** Security information for association setup confirmation.
        - **Optional Parameters:** Additional parameters for negotiation.
4. **Selecting Acknowledgment Packet (SACK):**
    - **Purpose:** Acknowledges receipt of data and provides information about the received data.
    - **Fields:**
        - **Cumulative TSN Ack:** Acknowledges receipt of all TSNs up to this value.
        - **Advertised Receiver Window Credit:** Indicates the size of the receiver's buffer.
        - **Gap Ack Blocks:** Specify gaps in the received sequence numbers.
        - **Duplicate TSNs:** Indicate duplicate TSNs.
5. **Heartbeat Request Packet (HEARTBEAT):**
    - **Purpose:** Checks the reachability and status of the peer endpoint.
    - **Fields:**

- **Request Sequence Number:** Identifies the heartbeat request.
- **Advertised Receiver Window Credit:** Indicates the size of the receiver's buffer.

6. **Heartbeat Acknowledgment Packet (HEARTBEAT-ACK):**
   - **Purpose:** Acknowledges the receipt of a heartbeat request and provides information about the sender's status.
   - **Fields:**
     - **Request Sequence Number:** Copied from the corresponding heartbeat request.
     - **Advertised Receiver Window Credit:** Indicates the size of the receiver's buffer.
7. **Abort Packet (ABORT):**
   - **Purpose:** Aborts an association in case of an error or unexpected event.
   - **Fields:**
     - **Verification Tag:** Helps identify the association to be aborted.
     - **Error Cause Code:** Indicates the reason for the abort.
8. **Shutdown Packet (SHUTDOWN):**
   - **Purpose:** Initiates the graceful shutdown of one direction of the association.
   - **Fields:**
     - **Cumulative TSN Ack:** Acknowledges receipt of all TSNs up to this value.
9. **Shutdown Acknowledgment Packet (SHUTDOWN-ACK):**
   - **Purpose:** Acknowledges the receipt of a shutdown request.
   - **Fields:**
     - **Cumulative TSN Ack:** Acknowledges receipt of all TSNs up to this value.
10. **Error Packet (ERROR):**
    - **Purpose:** Communicates error conditions between endpoints.
    - **Fields:**
      - **Error Causes:** Describes the error condition with specific cause codes.

Understanding these packet types and their associated fields helps in managing the communication flow, error handling, and association setup and teardown in SCTP. The protocol's flexibility and support for various packet types make it suitable for a wide range of communication scenarios.

Q.4) discuss SCTP association and explain different scenarios such as association establishment, data transfer, association termination, and association abortion.

An SCTP association represents a connection between two endpoints, providing a reliable and ordered data transfer service. The association lifecycle involves several stages, including establishment, data transfer, termination, and abortion. Let's discuss each of these scenarios:

1. Association Establishment:

- **Initiation:**

1. The SCTP association begins with the initiation of the association setup.
2. The initiating endpoint sends an INIT (Initiation) packet to the peer endpoint.
3. The INIT packet includes parameters like the maximum number of outbound streams, receiver window size, and initial Transmission Sequence Number (TSN).

- **Acknowledgment:**
  1. The receiving endpoint responds with an INIT-ACK (Initiation Acknowledgment) packet.
  2. The INIT-ACK acknowledges the initiation and includes parameters for negotiation, such as the state cookie.
  3. Both endpoints now share a Verification Tag for secure communication.
- **Confirmation:**
  1. The initiating endpoint sends a COOKIE-ECHO packet containing the state cookie to confirm the association setup.
  2. The receiving endpoint replies with a COOKIE-ACK to acknowledge the receipt of the state cookie.
  3. The association is now established, and both endpoints can exchange data.

2. Data Transfer:

- **Message Transmission:**
  1. Endpoints can exchange user data using DATA packets.
  2. SCTP is message-oriented, preserving message boundaries during transmission.
  3. Each DATA packet includes the Verification Tag, source/destination ports, and payload data.
- **Selective Acknowledgment (SACK):**
  1. The receiving endpoint periodically sends SACK packets to acknowledge the receipt of data chunks.
  2. SACK includes information about the cumulative TSN Ack and may specify gaps and duplicate TSNs.

3. Association Termination:

- **Graceful Shutdown:**
  1. An endpoint that wishes to close its side of the association sends a SHUTDOWN packet.
  2. The SHUTDOWN packet includes the Cumulative TSN Ack to acknowledge received data.
  3. The other endpoint acknowledges with a SHUTDOWN-ACK.

4. Both sides continue to send any remaining data.
5. After data transfer completes, a final SHUTDOWN packet is exchanged, and the association is terminated.

4. Association Abortion:

- **Abort Packet:**
  1. In the case of an error or unexpected event, an endpoint may send an ABORT packet.
  2. The ABORT packet includes a Verification Tag and an Error Cause Code indicating the reason for the abort.
  3. The peer endpoint acknowledges with an ABORT-ACK.

Additional Notes:

- **Multi-Homing Consideration:**
  - SCTP supports multi-homing, allowing endpoints to have multiple IP addresses.
  - This feature enhances fault tolerance and reliability, especially in scenarios where one network path becomes unavailable.
- **Timers and Retransmission:**
  - SCTP uses timers to manage various aspects of the association, such as retransmission of data.
  - Timers help ensure reliable and efficient communication even in the presence of network delays or temporary failures.

In summary, SCTP association involves initiation, negotiation, data transfer, graceful shutdown, and the possibility of abrupt termination in the event of an error. Its flexibility, support for multi-homing, and rich set of features make SCTP suitable for various communication scenarios, including those with stringent reliability and fault-tolerance requirements.

Stream Control Transmission Protocol

Stream Transmission Control Protocol (SCTP) is a connection-oriented protocol, similar to TCP, but provides message-oriented data transfer, similar to **UDP**. The AIX® operating system is compliant with RFC 4960.

Attribute	**TCP**	**UDP**	SCTP
Reliability	Reliable	Unreliable	Reliable
Connection Management	Connection-oriented	Connectionless	Connection-oriented

Attribute	TCP	UDP	SCTP
Transmission	Byte-oriented	Message-oriented	Message-oriented
Flow Control	Yes	No	Yes
Congestion Control	Yes	No	Yes
Fault Tolerance	No	No	Yes
Data Delivery	Strictly Ordered	Unordered	Partially ordered
Security	Yes	Yes	Improved

Table 1. Differences between TCP, UDP, and SCTP

In general, **SCTP** may provide more flexibility for certain applications, like **Voice over IP (VoIP)**, that require the reliable but message-oriented data transfer. For this category of applications, **SCTP** is most likely better-suited than **TCP** or **UDP**.

- **TCP** provides reliable and strict order-of-transmission data delivery. For applications that need reliability, but can tolerate unordered or partially ordered data delivery, **TCP** may cause some unnecessary delay because of head-of-line blocking. With the concept of multiple streams within a single connection, **SCTP** can provide strictly ordered delivery within a stream while logically isolating data from different streams.
- **SCTP** is message-oriented, unlike **TCP**, which is byte-oriented. Because of the byte-oriented nature of **TCP**, the application has to add its own record marking to maintain message boundaries.
- **SCTP** provides some degree of fault tolerance by using the Multihoming feature. A host is considered multihomed when it has more than one network interface attached, either on the same or different networks. An **SCTP** association can be established between two multihomed hosts. In this case, all IP addresses of both endpoints are exchanged at association startup; this allows each endpoint to use any of these addresses over the life of the connection if one of the interfaces is down for any reason, as long as the peer is reachable through the alternate interfaces.
- **SCTP** provides additional security features that **TCP** and **UDP** do not. In **SCTP**, resource allocation during association setup is delayed until the client's identity can be verified using a cookie exchange mechanism, thus reducing the possibility of Denial of Service attacks.

- **SCTP association startup and shutdown**
  SCTP association startup and shutdown guidelines are described here.
- **SCTP socket APIs**
  The features of **SCTP** socket APIs include consistency, accessibility, and compatibility.

SCTP association startup and shutdown guidelines are described here.

SCTP association is comprised of a four way handshake that takes place in the following order:

1. The client sends an **INIT** signal to the server to initiate an association.
2. On receipt of the **INIT** signal, the server sends an **INIT-ACK** response to the client. This **INIT-ACK** signal contains a state cookie. This state cookie must contain a Message Authentication Code (MAC), along with a time stamp corresponding to the creation of the cookie, the life span of the state cookie, and the information necessary to establish the association. The MAC is computed by the server based on a secret key only known to it.
3. On receipt of this **INIT-ACK** signal, the client sends a **COOKIE-ECHO** response, which just echoes the state cookie.
4. After verifying the authenticity of the state cookie using the secret key, the server then allocates the resources for the association, sends a **COOKIE-ACK** response acknowledging the **COOKIE-ECHO** signal, and moves the association to **ESTABLISHED** state.

SCTP supports also graceful close of an active association upon request from the **SCTP** user. The following sequence of events occurs:

1. The client sends a **SHUTDOWN** signal to the server, which tells the server that the client is ready to close the connection.
2. The server responds by sending a **SHUTDOWN-ACK** acknowledgement.
3. The client then sends a **SHUTDOWN-COMPLETE** signal back to the server.

SCTP also supports abrupt close (**ABORT** signal) of an active association upon the request from the **SCTP** client or due to an error in the **SCTP** stack. However, **SCTP** does not support half open connections. More information about the protocol and its internals can be found in RFC 4960.

In addition to the differences specified above between **SCTP** and existing transport protocols, **SCTP** provides the following features:

- **Sequenced delivery within streams**: A stream in **SCTP** context refers to a sequence of user messages that are transferred between endpoints. An **SCTP** association can support multiple streams. At the time of association setup, the user can specify the number of streams. The effective value of number of stream is fixed after negotiating with the peer. Within each stream the order of data delivery is strictly maintained. However across the streams data delivery is independent. Thus, the loss of data from one stream does not prevent data from being delivered in another stream. This allows a user application to use different streams for logically independent data. Data can also be delivered in an unordered fashion using a special option. This can be useful to send urgent data.
- **User data fragmentation**: **SCTP** can fragment user messages to ensure that the packet size passed to the lower layer does not exceed the path MTU. At the time of receipt the fragments are reassembled into a complete message and passed to the user. Although fragmentation can also be performed at the network level, transport-layer fragmentation provides various advantages over IP-layer fragmentation. Some of these advantages including not having to re-send entire messages when fragments are lost in the network and reducing the burden on routers, which would otherwise possibly have to perform IP fragmentation.
- **Acknowledgment and Congestion Control**: Packet acknowledgment is necessary for reliable data delivery. When **SCTP** does not get a acknowledgment for a packet it sends within a specified time, it triggers a retransmission of the same packet. **SCTP** follows congestion control algorithms similar to those used by **TCP**. In addition to using cumulative acknowledgements like **TCP**, **SCTP** uses Selective Acknowledgment (SACK) mechanism which allows it to acknowledge packets selectively.
- **Chunk bundling**: A chunk may contain user data or **SCTP** control information. Multiple chunks can be bundled together under the same **SCTP** header. Chunk bundling requires assembly of chunks into **SCTP** packet at the sending end and subsequently disassembly of the packet into chunks at the receiver end.
- **Packet validation**: Each **SCTP** packet has a verification tag field that is set during the time of association startup by each endpoint. All packets are sent with the same verification tag through the lifetime of the association. If, during the lifetime of the association, a packet is received with an unexpected verification tag, the packet is discarded. Also the CRC-32 checksum should be set by sender of each **SCTP** packet to provide increased protection for the data corruption in the network. Any packet received with an invalid CRC-32 checksum is discarded.
- **Path management**: At the time of association setup, each endpoint may advertise the list of transport addresses it has. However only one primary path is defined for the **SCTP** association and is used for the normal data transfer. In case the primary path goes down, the other transport addresses are used. During the lifetime of the association, heartbeats are sent at regular interval through all the paths to monitor the status of the path.

Q.5) compare and contrast the state transition diagram of SCTP with the corresponding diagram of TCP.

SCTP state transition diagram

The Stream Control Transmission Protocol (SCTP) is another transport layer protocol in TCP/IP, but it differs from both TCP and UDP in that it provides multiple streams of data within a single connection. SCTP is a connection-oriented protocol, which establishes, maintains, and terminates connections between endpoints. It uses a state transition diagram to illustrate how it manages connections and is more complex than TCP's, involving multiple streams, associations, and chunks. These states are CLOSED, COOKIE-WAIT, COOKIE-ECHOED, ESTABLISHED, SHUTDOWN-PENDING, SHUTDOWN-SENT, SHUTDOWN-RECEIVED, SHUTDOWN-ACK-SENT and CLOSED. This protocol is suitable for applications that require reliable and ordered delivery of data but also need to support multiple streams of data with different characteristics like web browsing, email, or file transfer.

TCP/IP state transition diagram

The TCP/IP state transition diagram outlines the possible states a TCP connection can take, as well as the events and actions that cause transitions between them. These states include CLOSED, where no connection exists; LISTEN, where a server waits for incoming connection requests; SYN-SENT, where a client sends a connection request to a server; SYN-RECEIVED, where a server receives a connection request from a client; ESTABLISHED, where data can be exchanged; FIN-WAIT-1, where one host initiates termination of a connection; FIN-WAIT-2, where one host receives an acknowledgment for its FIN segment; CLOSE-WAIT, where one host receives a FIN segment from the other host; CLOSING, where both hosts send FIN segments and wait for acknowledgments; LAST-ACK, where one host sends the final acknowledgment for a FIN segment and waits for an acknowledgment from the other host; TIME-WAIT, where one host waits for a period of time after sending the final acknowledgment to ensure that the other host received it; and CLOSED, the final state in which the connection is terminated.

To keep track of all the different events happening during connection establishment, connection termination, and data transfer, TCP is specified as the finite state machine shown in Figure.

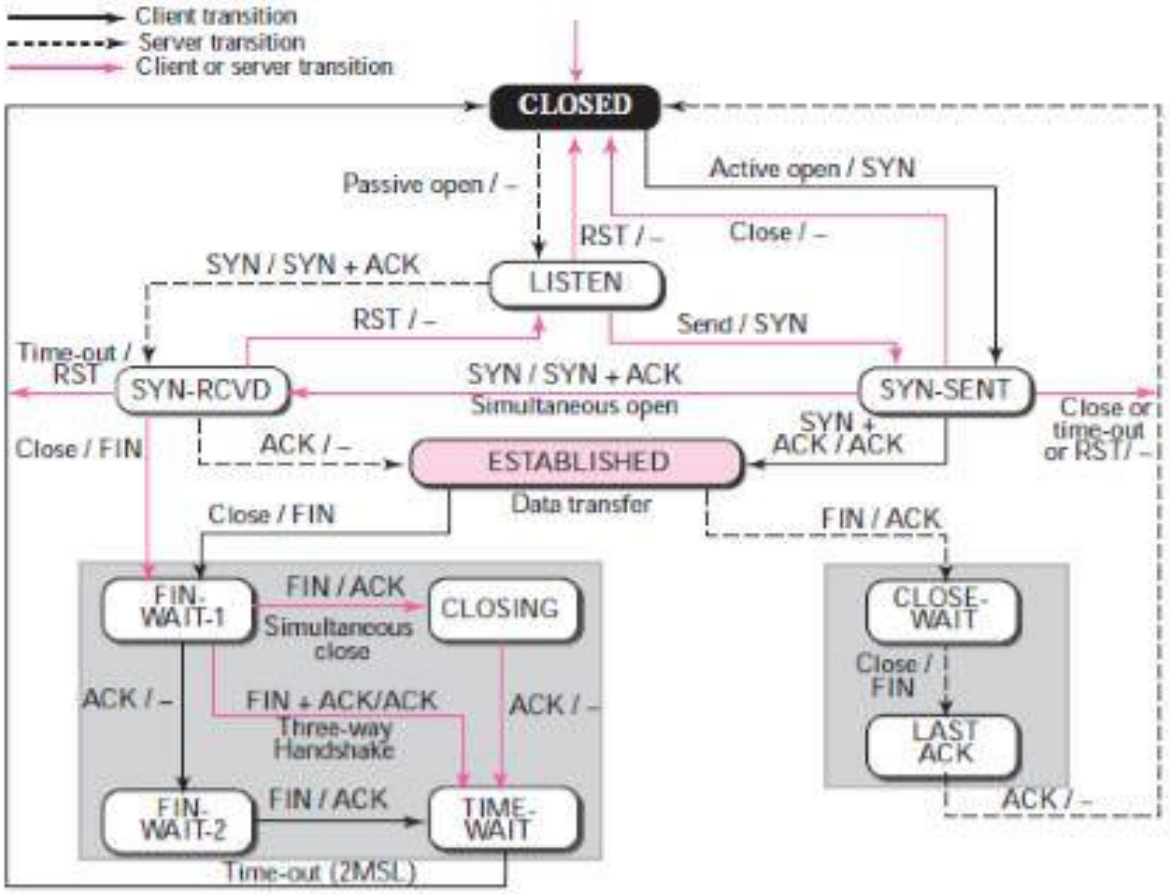
Client transition
Server transition
Client or server transition
CLOSED
Passive open / –
Active open / SYN
RST / –
Close / –
SYN / SYN + ACK
LISTEN
RST / –
Send / SYN
Time-out / RST
SYN-RCVD
SYN / SYN + ACK
Simultaneous open
SYN-SENT
Close or time-out or RST / –
Close / FIN
ACK / –
ESTABLISHED
SYN + ACK / ACK
Data transfer
Close / FIN
FIN / ACK
FIN-WAIT-1
FIN / ACK
Simultaneous close
CLOSING
CLOSE-WAIT
ACK / –
FIN + ACK/ACK
Three-way Handshake
ACK / –
Close / FIN
FIN-WAIT-2
FIN / ACK
TIME-WAIT
LAST ACK
ACK / –
Time-out (2MSL)

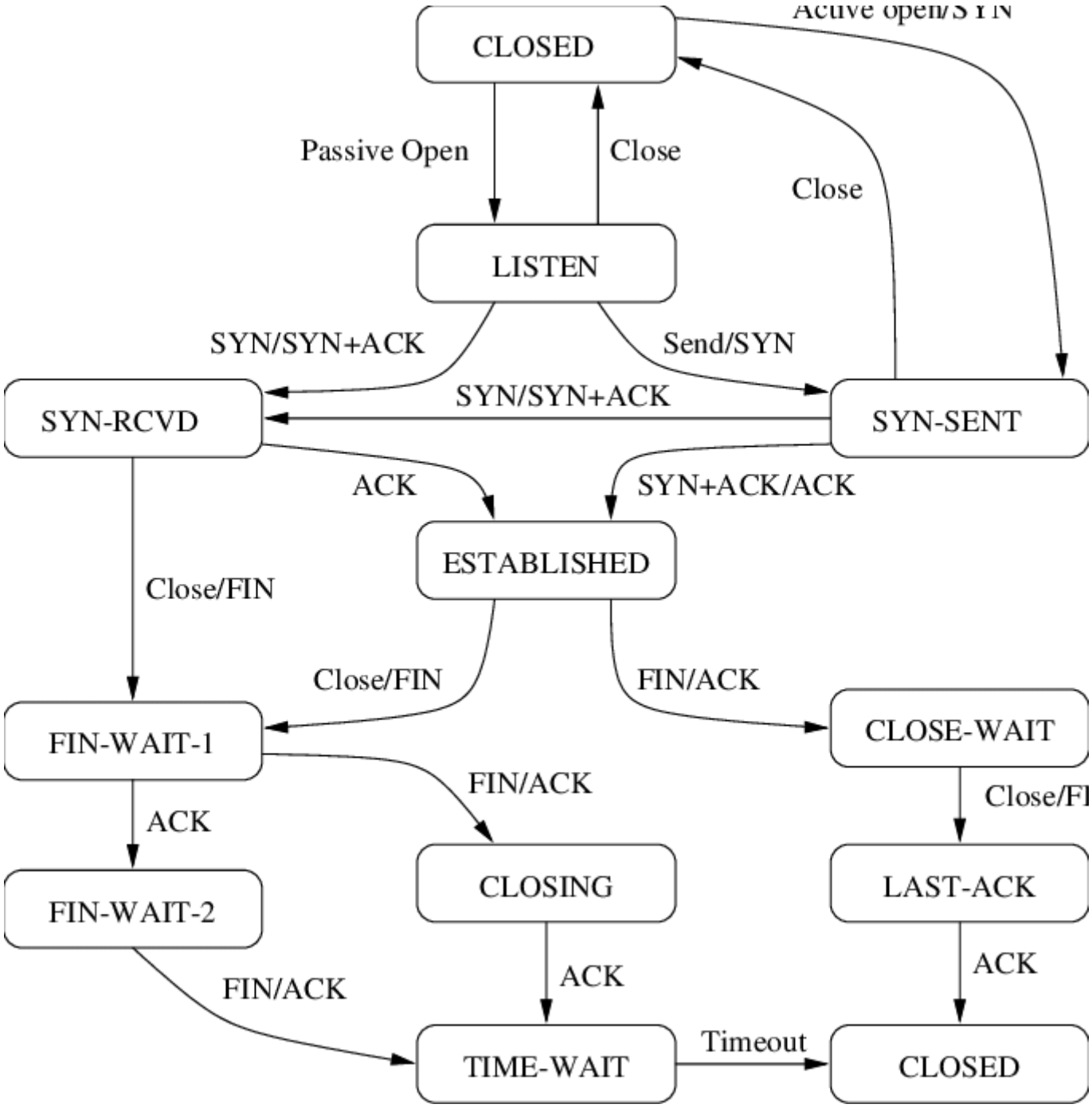
CLOSED
Active open/SYN
Passive Open
Close
Close
LISTEN
SYN/SYN+ACK
Send/SYN
SYN-RCVD
SYN/SYN+ACK
SYN-SENT
ACK
SYN+ACK/ACK
ESTABLISHED
Close/FIN
Close/FIN
FIN/ACK
FIN-WAIT-1
CLOSE-WAIT
FIN/ACK
Close/FI
ACK
CLOSING
LAST-ACK
FIN-WAIT-2
ACK
FIN/ACK
Timeout
TIME-WAIT
CLOSED

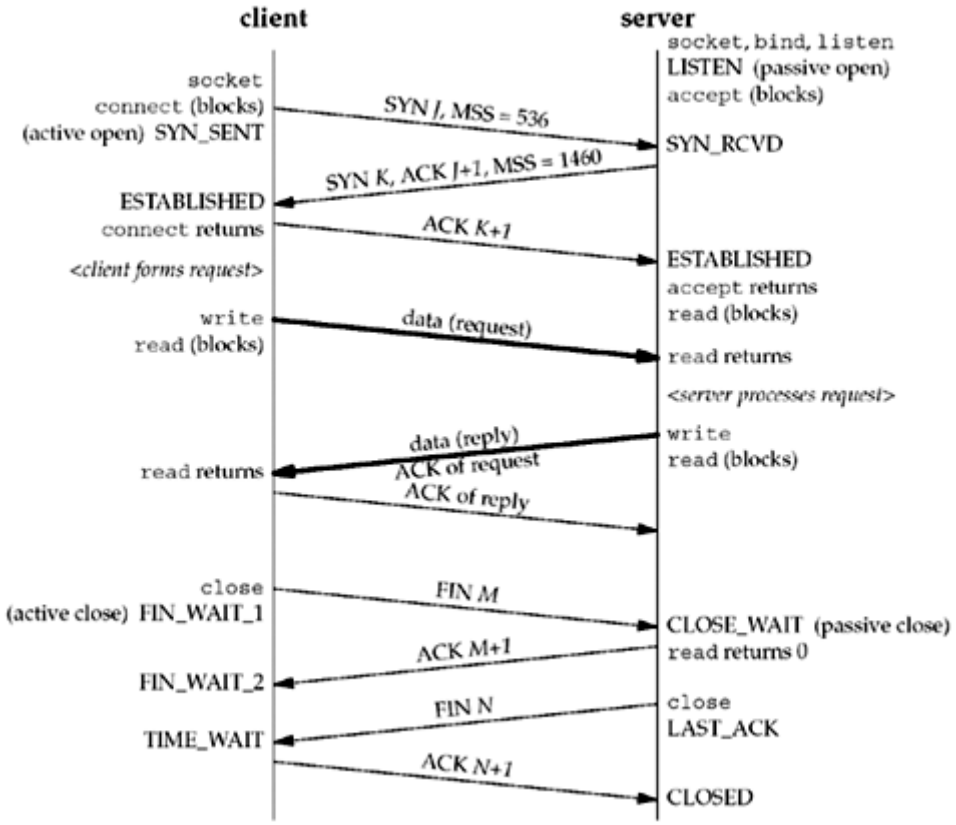

UDP state transition diagram

The User Datagram Protocol (UDP) is another transport layer protocol in TCP/IP, but it is different from TCP in that it does not provide reliability, ordering, or error-checking. UDP is a connectionless protocol, which means that it does not establish, maintain, or terminate connections between endpoints. UDP simply sends and receives datagrams, which are packets of data with a source and destination address. Therefore, UDP does not have a state transition diagram, as it does not have any states or transitions. UDP is suitable for applications that require fast and efficient data transmission, but can tolerate some data loss or disorder, such as video streaming, voice over IP, or online gaming.

State transition diagrams provide a visual representation of the various states and transitions that a protocol can go through during its lifecycle. Let's compare and contrast the state transition diagrams of Stream Control Transmission Protocol (SCTP) and Transmission Control Protocol (TCP):

SCTP State Transition Diagram:

1. **Closed:**
    - Initial state.
    - No connection exists.
    - Can transition to the `Cookie-Wait` state when an INIT packet is received.
2. **Cookie-Wait:**
    - Awaiting confirmation of association setup after sending INIT.
    - Transitions to `Established` on successful confirmation.
3. **Shutdown-Pending:**

- Awaiting confirmation of association termination after sending SHUTDOWN.
- Transitions to `Shutdown` on successful confirmation.

4. **Established:**
   - Normal data transfer state.
   - Can transition to `Shutdown-Pending` for graceful shutdown.
   - May transition to `Closed` in case of an error.
5. **Shutdown:**
   - Awaiting final acknowledgment of association termination.
   - Transitions to `Closed` on successful confirmation.
   - May transition to `Closed` directly in the case of an error.
6. **Shutdown-Ack-Sent:**
   - Awaiting acknowledgment for the final SHUTDOWN.
   - Transitions to `Closed` on successful confirmation.
   - May transition to `Closed` directly in the case of an error.
7. **Shutdown-Pending (T):**
   - Temporary state during retransmission of the SHUTDOWN packet.
   - Transitions back to `Shutdown-Pending` after retransmission.
8. **Shutdown-Ack-Sent (T):**
   - Temporary state during retransmission of the final SHUTDOWN packet.
   - Transitions back to `Shutdown-Ack-Sent` after retransmission.

TCP State Transition Diagram:

1. **Closed:**
   - Initial state.
   - No connection exists.
   - Can transition to the `Listen` state when a connection request is received.
2. **Listen:**
   - Awaiting a connection request.
   - Transitions to `Syn-Received` on receiving a connection request (SYN).
3. **Syn-Received:**
   - Awaiting acknowledgment of the connection request (SYN-ACK).
   - Transitions to `Established` on successful acknowledgment.
4. **Syn-Sent:**
   - Active open; connection request sent.
   - Awaiting acknowledgment of the connection request.
   - Transitions to `Established` on successful acknowledgment.
5. **Established:**
   - Normal data transfer state.
   - Can transition to `Fin-Wait-1` or `Close-Wait` for connection termination.
6. **Fin-Wait-1:**
   - Awaiting the peer's acknowledgment of the connection termination.
   - Transitions to `Fin-Wait-2` on acknowledgment.
7. **Fin-Wait-2:**
   - Awaiting the peer's connection termination request.

- Transitions to `Time-Wait` or `Closed` on receiving the peer's FIN.

8. **Close-Wait:**
    - Awaiting a connection termination request from the local user.
    - Transitions to `Last-Ack` on receiving the local user's close request.
9. **Last-Ack:**
    - Awaiting acknowledgment of the connection termination request.
    - Transitions to `Closed` on acknowledgment.
10. **Time-Wait:**
    - Awaits any remaining delayed packets.
    - Transitions to `Closed` after a sufficient time interval.
11. **Closing:**
    - Active close; connection termination request sent.
    - Awaiting acknowledgment of the connection termination request.
    - Transitions to `Time-Wait` or `Closed` on acknowledgment.

Comparison:

- **Commonality:**
    - Both SCTP and TCP have states for connection establishment, data transfer, and connection termination.
    - Both protocols have states representing temporary conditions during retransmission.
- **Differences:**
    - SCTP includes states like `Cookie-Wait` and `Shutdown-Pending (T)` specifically related to its unique features (e.g., multi-homing and graceful shutdown).
    - TCP has states like `Syn-Received` and `Syn-Sent` specific to its three-way handshake for connection establishment.
    - SCTP provides more flexibility for simultaneous data streams and multi-homing, reflected in its state diagram.
- **Termination Handling:**
    - SCTP has explicit states for `Shutdown-Ack-Sent` and `Shutdown-Pending (T)` during the termination process.
    - TCP has separate states for handling connection termination, including `Fin-Wait` states and `Closing`.

In summary, while both SCTP and TCP share some common states related to connection establishment, data transfer, and termination, their differences reflect the unique features and design considerations of each protocol. SCTP's state transition diagram accommodates its support for multi-streaming, multi-homing, and graceful shutdown. TCP, being a more traditional protocol, emphasizes the three-way handshake and connection termination process in its state diagram.

Q.6) xplain the flow control mechanism in SCTP and discuss the behaviour of the sender site and the receiver site.

Stream Control Transmission Protocol (SCTP) is a transport layer protocol that provides reliable, connection-oriented communication. It is designed to offer features not found in other transport

protocols like Transmission Control Protocol (TCP) and User Datagram Protocol (UDP). One of the distinctive features of SCTP is its support for multiple streams, which allows for improved performance and flexibility.

SCTP uses a flow control mechanism to manage the transmission of data between the sender and receiver sites. The flow control in SCTP is performed at the stream level, meaning that flow control can be applied independently to each stream.

Here's an overview of the flow control mechanism in SCTP:

Sender Site:

1. **Sending Data Chunks:**
    - The sender sends data in the form of data chunks.
    - Each data chunk belongs to a specific stream and has a Stream Sequence Number (SSN) to identify its position within that stream.
2. **Advertised Receiver Window:**
    - The receiver advertises its available buffer space through the Receiver Window Credit (RWC) parameter in the SCTP control chunks.
    - The RWC indicates the number of SSNs the receiver can accept for each stream.
3. **Flow Control Algorithm:**
    - The sender monitors the Receiver Window Credit (RWC) for each stream.
    - It ensures that the number of outstanding (unacknowledged) SSNs for a particular stream does not exceed the advertised RWC.
4. **Pausing Transmission:**
    - If the sender reaches the flow control limit for a stream (i.e., the number of outstanding SSNs exceeds the RWC), it stops sending data for that stream until the receiver advertises a larger window.

Receiver Site:

1. **Receiving Data Chunks:**
    - The receiver collects incoming data chunks, acknowledges them, and delivers the data to the upper-layer protocol.
2. **Receiver Window Credit (RWC):**
    - The receiver advertises its available buffer space using the RWC parameter in SCTP control chunks.
    - The RWC is dynamically adjusted based on the available buffer space at the receiver.
3. **Updating RWC:**
    - As the receiver processes incoming data and frees up buffer space, it updates the RWC to reflect the increased capacity for each stream.
4. **Acknowledging Data:**
    - The receiver sends back acknowledgment chunks with the Cumulative TSN Acknowledgment (CumTsnAck) parameter, indicating the highest SSN received in each stream.

Key Points:

- Flow control is performed independently for each stream, allowing for better utilization of available bandwidth.
- Dynamic adjustment of the Receiver Window Credit (RWC) accommodates variations in the receiver's buffer space availability.
- SCTP ensures that the sender does not overwhelm the receiver by respecting the advertised receiver window for each stream.

In summary, SCTP's flow control mechanism is designed to maintain efficient and reliable communication by adapting to the dynamic buffer space availability at the receiver site for each individual stream.

Q.7) explain the error control mechanism in SCTP and discuss the behaviour of the sender site and the receiver site.

Stream Control Transmission Protocol (SCTP) employs an error control mechanism to ensure reliable and ordered delivery of data. This mechanism includes features such as acknowledgment, retransmission, and selective acknowledgment to handle potential packet loss, corruption, or out-of-order delivery. Here's an overview of the error control mechanism in SCTP, covering the behavior of both the sender and receiver sites:

Sender Site:

1. **Transmission Control:**
    - The sender breaks the data into smaller units called chunks.
    - Each chunk is assigned a unique Transmission Sequence Number (TSN) to maintain order and track the transmission.
2. **Retransmission Timer:**
    - SCTP uses a retransmission timer for each transmitted chunk.
    - If the sender does not receive an acknowledgment for a chunk before the timer expires, it assumes the chunk is lost or delayed and initiates retransmission.
3. **Selective Retransmission:**
    - SCTP supports selective acknowledgment (SACK), allowing the receiver to specify which chunks have been successfully received.
    - Upon receiving a SACK, the sender can selectively retransmit only the missing or lost chunks rather than retransmitting the entire set.
4. **Fast Retransmit:**
    - SCTP includes a fast retransmit mechanism that triggers the retransmission of a chunk upon the detection of duplicate acknowledgments.
    - If the sender receives a series of duplicate acknowledgments for the same TSN, it interprets it as an indication of a specific chunk loss and initiates fast retransmission.
5. **Cumulative Acknowledgment:**
    - The sender receives acknowledgments containing the Cumulative TSN Acknowledgment (CumTsnAck), indicating the highest TSN that has been successfully received by the receiver.

- It helps the sender track the progress of the acknowledged data.

Receiver Site:

1. **Reassembly:**
   - The receiver collects incoming chunks, reassembles them based on the TSNs, and delivers the data to the upper-layer protocol in the correct order.
2. **Acknowledgment:**
   - The receiver acknowledges the receipt of data using acknowledgment chunks.
   - Acknowledgments contain the Cumulative TSN Acknowledgment, acknowledging all chunks up to a specific TSN.
3. **Selective Acknowledgment (SACK):**
   - The receiver may include SACK chunks in its acknowledgments to inform the sender about the status of individual chunks.
   - SACK allows the sender to identify which chunks need to be retransmitted.
4. **Duplicate Acknowledgments:**
   - The receiver sends duplicate acknowledgments when it receives out-of-order chunks or detects gaps in the received sequence.
   - Fast retransmit is triggered at the sender when it receives a certain number of duplicate acknowledgments.

Key Points:

- SCTP's error control mechanism ensures reliable and ordered delivery of data.
- Retransmission, selective acknowledgment, fast retransmit, and cumulative acknowledgment are key components of SCTP's error control.
- The selective acknowledgment feature allows for efficient recovery from specific chunk losses without retransmitting unnecessary data.
- The error control mechanisms contribute to SCTP's robustness in dealing with network issues such as packet loss or delay.

In summary, SCTP's error control mechanisms help maintain the integrity and reliability of data transmission by enabling the sender and receiver to respond effectively to issues such as packet loss or out-of-order delivery.

Q.8) explain the congestion control mechanism in SCTP and compare with the similar mechanism in TCP.

Stream Control Transmission Protocol (SCTP) and Transmission Control Protocol (TCP) both employ congestion control mechanisms to regulate the flow of data and prevent network congestion. However, there are some differences in how each protocol handles congestion control.

Congestion Control Mechanism in SCTP:

1. **Adaptive Window Mechanism:**
   - SCTP uses a congestion control mechanism based on an adaptive window scheme.

- The sender adjusts the number of outstanding data chunks based on the perceived network conditions.
- The sender maintains a Congestion Window (cwnd) that dynamically changes to control the rate of data transmission.

2. **Slow Start and Congestion Avoidance:**
   - SCTP employs a slow start phase where the sender starts with a small congestion window and gradually increases it until it detects congestion.
   - After reaching a certain threshold, SCTP transitions to a congestion avoidance phase where the congestion window increases more slowly.
3. **Fast Retransmit and Fast Recovery:**
   - SCTP includes mechanisms similar to TCP's fast retransmit and fast recovery to quickly recover from packet loss.
   - If the sender detects missing acknowledgments for a specific TSN (Transmission Sequence Number), it can trigger the fast retransmit to retransmit the missing data.
4. **Selective Acknowledgments (SACK):**
   - SCTP uses selective acknowledgments, allowing the receiver to inform the sender about which chunks have been successfully received.
   - This enhances the ability to recover from packet loss efficiently.

Comparison with TCP:

1. **Multiple Streams:**
   - SCTP supports multiple streams, and congestion control is applied independently to each stream.
   - In TCP, congestion control is applied globally to the entire connection.
2. **Ordered and Unordered Delivery:**
   - SCTP allows both ordered and unordered delivery of messages within streams, and each stream has its congestion control.
   - TCP, being a byte-stream protocol, has a single congestion control mechanism for the entire connection.
3. **Dynamic Address Reconfiguration:**
   - SCTP supports dynamic address reconfiguration, allowing endpoints to add or remove IP addresses during an active connection.
   - TCP does not have native support for dynamic address reconfiguration.
4. **Multi-Homing:**
   - SCTP supports multi-homing, allowing a connection to have multiple IP addresses at each endpoint.
   - TCP typically operates with a single IP address per endpoint.
5. **Association Initialization:**
   - SCTP establishes associations between endpoints, and each association can have multiple streams.
   - TCP establishes a connection between two endpoints without the concept of streams.

While both SCTP and TCP aim to prevent network congestion and ensure reliable data delivery, SCTP's support for multiple streams, selective acknowledgments, and dynamic reconfiguration

makes its congestion control mechanisms more flexible in certain scenarios. Additionally, SCTP's per-stream congestion control helps in efficiently utilizing network resources for diverse application requirements.

Figure 16.23 *State transition diagram*

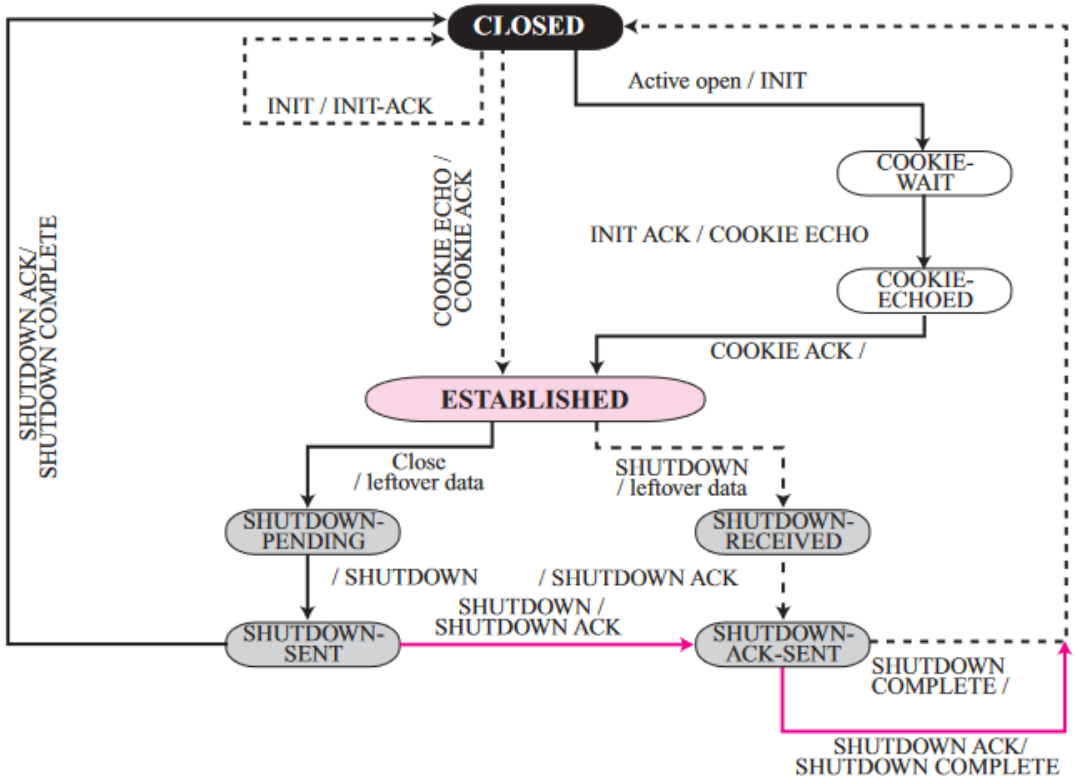

- SCTP is a message-oriented, reliable protocol that combines the good features of UDP and TCP. SCTP provides additional services not provided by UDP or TCP, such as multiple-stream and multihoming services. SCTP is a connection-oriented protocol. An SCTP connection is called an association. SCTP provides flow control, error control, and congestion control.
- SCTP uses the term packet to define a transportation unit. In SCTP, control information and data information are carried in separate chunks.
- To distinguish between different streams, SCTP uses the sequence identifier (SI). To distinguish between different data chunks belonging to the same stream, SCTP uses the stream sequence number (SSN). Data chunks are identified by three identifiers: TSN, SI, and SSN.
- SCTP acknowledgment numbers are used only to acknowledge data chunks; control chunks are acknowledged, if needed, by another control chunk.
- SCTP has states within a transition diagram. The states defined for SCTP are CLOSED, COOKIE-

WAIT, COOKIE-ECHOED, ESTABLISHED, SHUTDOWN-PENDING, SHUTDOWN-SENT, SHUTDOWN-RECEIVED, and SHUTDOWN-ACK-SENT.

- A DATA chunk cannot carry data belonging to more than one message, but a message can be split into several chunks (fragmentation).
- An SCTP association is normally established using four packets (four-way hand shaking). An association is normally terminated using three packets (three-way handshaking). An SCTP association uses a cookie to prevent blind flooding attacks and a verification tag to avoid insertion attacks.
- The SCTP acknowledgment SACK reports the cumulative TSN, the TSN of the last data chunk received in order, and selective TSN that have been received.

Q.9) What happens if a SACK chunk is delayed or lost?

In the Stream Control Transmission Protocol (SCTP), the Selective Acknowledgment (SACK) chunk is used by the receiver to inform the sender about the status of received data chunks. If a SACK chunk is delayed or lost, it can have implications for the sender's understanding of the state of the transmitted data. Let's explore the potential consequences:

1. **Delayed SACK:**
    - If a SACK chunk is delayed but eventually reaches the sender, it still serves its purpose by providing information about successfully received data chunks.
    - The sender can use the delayed SACK information to update its congestion control parameters, identify gaps in the received data, and trigger necessary retransmissions if needed.
2. **Lost SACK:**
    - If a SACK chunk is lost in transit and the sender doesn't receive the acknowledgment, the sender may incorrectly assume that some of the sent data chunks are still pending acknowledgment.
    - This can lead to suboptimal congestion control behavior, potentially slowing down the sender's transmission rate due to a perceived congestion event.
3. **Impact on Congestion Control:**
    - The timely receipt of SACK chunks is crucial for effective congestion control in SCTP.
    - If SACK chunks are lost or delayed, the sender may not have accurate information about the state of the network and may not adjust its congestion control parameters optimally.
4. **Retransmission Mechanism:**

- SCTP includes a retransmission mechanism to handle lost or missing data chunks.
- If the sender doesn't receive SACK information for certain data chunks within a reasonable time, it may initiate retransmissions based on its timeout mechanisms.

5. **Potential Retransmission Timeout (RTO) Issues:**
    - Delayed or lost SACK information can affect the accuracy of the Round-Trip Time (RTT) estimation, which is used in the calculation of the Retransmission Timeout (RTO).
    - Incorrect RTO values may lead to premature or delayed retransmissions, impacting the overall efficiency of the SCTP congestion control algorithm.

In summary, while SCTP is designed to provide reliable and flexible congestion control through mechanisms like SACK, the loss or delay of SACK chunks can introduce challenges. It is essential for SCTP implementations to handle such scenarios by incorporating timeout mechanisms, retransmission strategies, and adaptive algorithms to ensure robust and efficient congestion control, even in the face of delayed or lost acknowledgment information.

Q.10) Some application programs, such as FTP, need more than one connection when using TCP. Find how the multi stream service of SCTP can help these applications establish only one association with several streams.

The multistream service of SCTP can be particularly beneficial for applications, like FTP, that require multiple connections when using TCP. SCTP's support for multiple streams within a single association offers advantages for such scenarios. Here's how the multistream service of SCTP can help applications like FTP:

1. **Single Association, Multiple Streams:**
    - In SCTP, an association represents the communication relationship between two endpoints. Within this single association, multiple streams can be established, each identified by a separate stream identifier.
    - FTP traditionally uses separate connections for control information (commands) and data transfer. SCTP's multistream capability allows these different types of data to be transmitted over separate streams within the same association.
2. **Enhanced Resource Utilization:**
    - SCTP's multistream service allows for better resource utilization by enabling parallelism. Different types of data, such as control commands and actual file transfers, can be sent concurrently over separate streams.
    - This can lead to improved performance and reduced latency, especially in scenarios where different types of data have different priorities or characteristics.
3. **Avoidance of Head-of-Line Blocking:**
    - In TCP, head-of-line blocking can occur, where the delay in delivering one packet can delay the delivery of subsequent packets. SCTP's multistream capability helps avoid

head-of-line blocking because data in one stream is independent of data in other streams.
- If there is congestion or delay in one stream, it does not impact the delivery of data in other streams.

4. **Dynamic Stream Creation:**
   - SCTP allows dynamic creation and deletion of streams during the lifetime of the association.
   - FTP applications can dynamically establish new streams for additional data transfers or close streams that are no longer needed, adapting to the changing requirements of the application.
5. **Improved Security:**
   - SCTP's multistream service also enhances security by allowing different streams to be associated with different security parameters. This can be useful in scenarios where certain data streams require higher levels of security than others.
6. **Reduced Connection Overhead:**
   - FTP typically establishes a control connection and a separate data connection for each file transfer. SCTP's multistream capability eliminates the need for establishing multiple connections, reducing the associated connection overhead.

In summary, the multistream service of SCTP provides a more flexible and efficient solution for applications like FTP that traditionally use multiple connections. By allowing multiple streams within a single association, SCTP facilitates parallelism, improves resource utilization, and offers greater adaptability to the dynamic requirements of applications, leading to enhanced performance and reduced overhead.

Q.11) A packet is carrying two DATA chunks, each containing 22 bytes of user data. What is the size of each DATA chunk? What is the total size of the packet?

In the Stream Control Transmission Protocol (SCTP), the size of a DATA chunk is influenced by several factors, including the amount of user data, the SCTP overhead, and any potential padding. The SCTP chunk structure consists of a common chunk header followed by various fields and the actual user data.

Here is a simplified breakdown:

1. **Common Chunk Header:**
   - The common chunk header in SCTP is 12 bytes.
2. **DATA Chunk Header:**
   - The DATA chunk itself has a header, which includes fields like the chunk type, chunk flags, length, and TSN (Transmission Sequence Number).
   - The header size for a DATA chunk is typically 16 bytes.
3. **User Data:**

- Each DATA chunk can carry user data. In your case, each DATA chunk contains 22 bytes of user data.

Now, let's calculate the size of each DATA chunk and the total size of the packet:

- Size of each DATA chunk = DATA Chunk Header + User Data
  - Size of each DATA chunk = 16 bytes (DATA chunk header) + 22 bytes (user data) = 38 bytes
- Total size of the packet (carrying two DATA chunks) = 2 * Size of each DATA chunk
  - Total size of the packet = 2 * 38 bytes = 76 bytes

So, each DATA chunk is 38 bytes, and the total size of the packet carrying two DATA chunks is 76 bytes.

Q.12) A SACK chunk reports the receipt of three out-of-order data chunks and five duplicate data chunks. What is the total size of the chunk in bytes?

In SCTP, the Selective Acknowledgment (SACK) chunk is used to acknowledge the receipt of out-of-order and duplicate data chunks. The SACK chunk includes information about these chunks using the Gap Acknowledgment (GAP) and Duplicate TSN (DUP) fields.

Here's how to calculate the size of the SACK chunk based on the information provided:

1. **SACK Chunk Header:**
   - The SACK chunk has a common header, typically 4 bytes.
2. **Gap Acknowledgment (GAP) Entries:**
   - Each GAP entry requires 8 bytes (4 bytes for the start and 4 bytes for the end).
3. **Duplicate TSN (DUP) Entries:**
   - Each DUP entry requires 4 bytes.
4. **Number of Entries:**
   - The SACK chunk reports three out-of-order data chunks (GAP entries) and five duplicate data chunks (DUP entries).

Now, let's calculate the total size of the SACK chunk:

- Size of SACK Chunk Header = 4 bytes
- Size of GAP entries = 3 GAP entries * 8 bytes each = 24 bytes
- Size of DUP entries = 5 DUP entries * 4 bytes each = 20 bytes

Total size of the SACK chunk = Size of SACK Chunk Header + Size of GAP entries + Size of DUP entries = 4 bytes + 24 bytes + 20 bytes = 48 bytes

So, the total size of the SACK chunk, based on the given information, is 48 bytes.

Q.13) A packet is carrying a COOKIE ECHO message and a DATA chunk. If the size of the cookie is 200 bytes and that of the user data is 20 bytes, what is the size of the packet?

In the Stream Control Transmission Protocol (SCTP), the size of a packet carrying both a COOKIE ECHO message and a DATA chunk is determined by the sum of the sizes of the individual chunks, along with any SCTP overhead.

Here's how to calculate the size of the packet:

1. **COOKIE ECHO Chunk:**
   - The COOKIE ECHO chunk has its own header and contains the cookie. The header size is typically 16 bytes.
   - Given that the size of the cookie is 200 bytes, the total size of the COOKIE ECHO chunk would be 16 bytes (header) + 200 bytes (cookie) = 216 bytes.
2. **DATA Chunk:**
   - The DATA chunk also has its own header. The header size for a DATA chunk is typically 16 bytes.
   - Given that the size of the user data is 20 bytes, the total size of the DATA chunk would be 16 bytes (header) + 20 bytes (user data) = 36 bytes.
3. **Total Size of the Packet:**
   - The total size of the packet carrying both the COOKIE ECHO and DATA chunks is the sum of the sizes of these chunks.
   - Total size = Size of COOKIE ECHO Chunk + Size of DATA Chunk = 216 bytes + 36 bytes = 252 bytes

Therefore, the size of the packet carrying a COOKIE ECHO message (with a 200-byte cookie) and a DATA chunk (with 20 bytes of user data) is 252 bytes.

Q.14) A packet is carrying a COOKIE ACK message and a DATA chunk. If the user data is 20 bytes, what is the size of the packet?

In the Stream Control Transmission Protocol (SCTP), the size of a packet carrying both a COOKIE ACK message and a DATA chunk is determined by the sum of the sizes of the individual chunks, along with any SCTP overhead.

Here's how to calculate the size of the packet:

1. **COOKIE ACK Chunk:**
   - The COOKIE ACK chunk has its own header, which is typically 4 bytes.
   - Since the COOKIE ACK chunk does not carry additional data (like a COOKIE ECHO), its size is primarily determined by the header.
   - The total size of the COOKIE ACK chunk would be 4 bytes.

2. **DATA Chunk:**
    - The DATA chunk also has its own header. The header size for a DATA chunk is typically 16 bytes.
    - Given that the size of the user data is 20 bytes, the total size of the DATA chunk would be 16 bytes (header) + 20 bytes (user data) = 36 bytes.
3. **Total Size of the Packet:**
    - The total size of the packet carrying both the COOKIE ACK and DATA chunks is the sum of the sizes of these chunks.
    - Total size = Size of COOKIE ACK Chunk + Size of DATA Chunk = 4 bytes + 36 bytes = 40 bytes

Therefore, the size of the packet carrying a COOKIE ACK message and a DATA chunk (with 20 bytes of user data) is 40 bytes.

Q.15) Four DATA chunks have arrived carrying the following information:

a. Which data chunk is a fragment?

b. Which data chunk is the first fragment?

c. Which data chunk is the last fragment?

d. How many middle fragments are missing?

TSN:27 SI:2 SSN:14 BE:00

TSN:33 SI:2 SSN:15 BE:11

TSN:26 SI:2 SSN:14 BE:00

TSN:24 SI:2 SSN:14 BE:00

TSN:21 SI:2 SSN:14 BE:10

In Stream Control Transmission Protocol (SCTP), the information provided in each DATA chunk includes the TSN (Transmission Sequence Number), SI (Stream Identifier), SSN (Stream Sequence Number), and BE (Beginning of Message).

Let's analyze the information for each DATA chunk:

a. **Which data chunk is a fragment?**

- A fragment is indicated by the BE (Beginning of Message) field. If BE is set to 1, it means the chunk is the beginning of a new message. If BE is set to 0, it indicates a fragment.

Based on the information:

- TSN:27 SI:2 SSN:14 BE:00
- TSN:33 SI:2 SSN:15 BE:11
- TSN:26 SI:2 SSN:14 BE:00
- TSN:24 SI:2 SSN:14 BE:00
- TSN:21 SI:2 SSN:14 BE:10

The second and fifth DATA chunks (TSN:33 and TSN:21) have BE set to 1, so they are not fragments. The other three (TSN:27, TSN:26, and TSN:24) have BE set to 0, indicating that they are fragments.

b. **Which data chunk is the first fragment?**

- The first fragment is the one where BE is set to 0, and it has the lowest SSN within the same stream.

Based on the information:

- TSN:27 SI:2 SSN:14 BE:00
- TSN:26 SI:2 SSN:14 BE:00
- TSN:24 SI:2 SSN:14 BE:00

All three of these DATA chunks have BE set to 0 and the same SSN (14). Since they have the same SSN, we need to check the TSN to determine the earliest fragment. The earliest TSN among these is TSN:24. Therefore, TSN:24 is the first fragment.

c. **Which data chunk is the last fragment?**

- The last fragment is the one where BE is set to 1, indicating the end of the message.

Based on the information:

- TSN:27 SI:2 SSN:14 BE:00
- TSN:33 SI:2 SSN:15 BE:11
- TSN:26 SI:2 SSN:14 BE:00
- TSN:24 SI:2 SSN:14 BE:00
- TSN:21 SI:2 SSN:14 BE:10

The second DATA chunk (TSN:33) has BE set to 1, indicating that it is the last fragment.

d. **How many middle fragments are missing?**

- To determine missing middle fragments, we need to look at the fragments between the first and last fragments.

Based on the information:

- TSN:27 SI:2 SSN:14 BE:00
- TSN:33 SI:2 SSN:15 BE:11
- TSN:26 SI:2 SSN:14 BE:00
- TSN:24 SI:2 SSN:14 BE:00
- TSN:21 SI:2 SSN:14 BE:10

There are no missing middle fragments because the SSN values between the first fragment (TSN:24) and the last fragment (TSN:33) are consecutive (14, 15). All fragments in this range are present.

Q.16) The value of the cumulative TSN in a SACK is 23. The value of the previous cumulative TSN in the SACK was 29. What is the problem?

In SCTP (Stream Control Transmission Protocol), the Cumulative TSN Acknowledgment (CumTsnAck) field in a SACK (Selective Acknowledgment) chunk represents the highest TSN (Transmission Sequence Number) received by the receiver. The CumTsnAck value indicates that all TSNs up to and including this value have been successfully received.

In the provided scenario, the CumTsnAck value in the current SACK is 23, and the previous CumTsnAck value was 29. This situation indicates a problem or inconsistency in the received TSNs. It suggests that there might be an issue with the ordering or reception of TSNs at the receiver.

Possible problems and considerations:

1. **Out-of-Order Arrival:**
    - TSNs are expected to be received in sequential order. A CumTsnAck value that decreases suggests that a TSN with a higher value arrived out of order or was not received.
2. **Packet Loss:**
    - The decrease in CumTsnAck may be indicative of packet loss. If some TSNs were lost in transit, the CumTsnAck value would not increment as expected.
3. **Retransmission Issues:**
    - If there are issues with TSN retransmissions, it might lead to a situation where the CumTsnAck value decreases.
4. **SACK Chunk Processing Error:**
    - There could be a processing error in handling SACK chunks. The CumTsnAck value should generally increase over time as new TSNs are received.

To resolve the problem, it's important to investigate the network conditions, check for possible packet loss, and ensure that the receiver is processing and acknowledging TSNs correctly. Analyzing the specific sequence of TSNs received and comparing it with the CumTsnAck values can help identify and address the root cause of the inconsistency. Additionally, reviewing the implementation of the SCTP stack on both sender and receiver sides may reveal any bugs or issues in the protocol handling.

Q.17) An SCTP association is in the ESTABLISHED state. It receives a SHUTDOWN chunk. If the host does not have any outstanding or pending data, what does it need to do?

When an SCTP association is in the ESTABLISHED state and receives a SHUTDOWN chunk, and the host does not have any outstanding or pending data to send, the host can respond with a SHUTDOWN ACK chunk.

Here's a general sequence of events:

1. **Receiving SHUTDOWN:**

- The SCTP association receives a SHUTDOWN chunk from the peer.

2. **Checking for Outstanding or Pending Data:**
   - The receiving host checks whether it has any outstanding or pending data to be sent. In this case, you mentioned that the host does not have any such data.
3. **Responding with SHUTDOWN ACK:**
   - If the host does not have any outstanding or pending data, it can respond to the received SHUTDOWN with a SHUTDOWN ACK chunk.
   - The SHUTDOWN ACK indicates acknowledgment of the received SHUTDOWN and signals that the host is ready to terminate the association.
4. **Association Termination:**
   - After the exchange of SHUTDOWN and SHUTDOWN ACK, both endpoints of the association are aware that no more data will be sent. The association moves into the SHUTDOWN-PENDING state.
5. **Closing the Association:**
   - The association continues the shutdown process, and when both ends acknowledge each other's SHUTDOWN ACK, the association transitions to the CLOSED state.

It's important to note that the SHUTDOWN process in SCTP is a graceful termination mechanism that allows the endpoints to exchange any remaining data before closing the association. If there is no outstanding or pending data, the SHUTDOWN process can proceed smoothly, and the association can be closed in an orderly manner.

Q.18) An SCTP association is in the COOKIE-WAIT state. It receives an INIT chunk;

what does it need to do?

When an SCTP association is in the COOKIE-WAIT state and receives an INIT chunk, it indicates that the association is in the process of being established. Here's what the host needs to do in this scenario:

1. **Processing the INIT Chunk:**
   - Upon receiving the INIT chunk, the host needs to process the information contained within the INIT chunk.
   - The INIT chunk is part of the SCTP association initiation process, and it contains parameters such as the Initiate Tag, Advertised Receiver Window Credit (a_rwnd), number of outbound streams, and other parameters needed to establish the association.
2. **Verifying the INIT Chunk:**
   - The host verifies the INIT chunk to ensure that it is valid and contains the necessary parameters for association setup.
3. **Generating INIT ACK Chunk:**
   - If the INIT chunk is valid and the host is willing to establish the association, it responds with an INIT ACK chunk.
   - The INIT ACK chunk acknowledges the receipt of the INIT and carries the host's own parameters for the association setup.

4. **Updating State to COOKIE-ECHOED:**
    - After sending the INIT ACK, the SCTP association transitions to the COOKIE-ECHOED state.
    - In the COOKIE-ECHOED state, the host is waiting for a COOKIE ECHO chunk from the other endpoint.
5. **Expecting COOKIE ECHO:**
    - Once the INIT ACK is sent, the host waits for the peer to respond with a COOKIE ECHO chunk.
    - The COOKIE ECHO chunk is part of the four-way handshake in SCTP and contains a cookie generated by the receiving host.
6. **Completing the Handshake:**
    - The association completes the handshake when the COOKIE ECHO is received and processed.
    - Upon successful completion of the handshake, the association transitions to the ESTABLISHED state, and communication between the two endpoints can begin.

It's important to note that the transition from COOKIE-WAIT to COOKIE-ECHOED is a step in the establishment of the SCTP association. The entire association setup involves a series of exchanges, and each side needs to perform its role in the handshake process for the association to reach the ESTABLISHED state.

Q.20) The following is a dump of a DATA chunk in hexadecimal format.

00000015 00000005 0003000A 00000000 48656C6C 6F000000

a. Is this an ordered or unordered chunk?

b. Is this the first, the last, the middle, or the only fragment?

c. How many bytes of padding are carried by the chunk?

d. What is the TSN?

e. What is the SI?

f. What is the SSN?

g. What is the message?

Let's analyze the provided dump of a DATA chunk:

Breaking down the fields:

1. **Header (first 4 bytes):**
    - `00000015`: TSN (Transmission Sequence Number) in hexadecimal.
2. **Flags (next 4 bytes):**
    - `00000005`: SI (Stream Identifier) and SSN (Stream Sequence Number) in hexadecimal.

3. **Length (next 4 bytes):**
    - `0003000A`: Length of the DATA chunk in hexadecimal.
4. **Payload (remaining bytes):**
    - `00000000 48656C6C 6F000000`: Message payload.

Now, let's answer the questions:

a. **Ordered or Unordered?**

- The ordering information is in the flags field (`00000005`). The last bit (LSB) of the flags indicates whether the chunk is ordered or unordered. In this case, the LSB is `1`, indicating that it is an **ordered** chunk.

b. **First, Last, Middle, or Only Fragment?**

- The middle fragment information is in the flags field (`00000005`). The second bit (from the right) indicates whether the chunk is a middle fragment. In this case, the bit is `0`, suggesting that it is **not a middle fragment**. Therefore, it could be the first, last, or the only fragment.
- To determine if it's the first or last, you would need to look at other chunks with the same TSN and Stream Identifier.

c. **Bytes of Padding?**

- The length field (`0003000A`) indicates that the DATA chunk has a length of `0x000A` or 10 bytes. Since the message payload is 7 bytes (`48656C6C6F`), the remaining 3 bytes are padding. Therefore, the chunk carries **3 bytes of padding**.

d. **TSN (Transmission Sequence Number)?**

- The TSN is `00000015` in hexadecimal, which is **21 in decimal**.

e. **SI (Stream Identifier)?**

- The Stream Identifier (SI) is `00000005` in hexadecimal, which is **5 in decimal**.

f. **SSN (Stream Sequence Number)?**

- The Stream Sequence Number (SSN) is also `00000005` in hexadecimal, which is **5 in decimal**.

g. **Message?**

- The payload is `48656C6C6F`, which translates to the ASCII string "Hello".

In summary:

- It is an **ordered** chunk.

- It is **not** a middle fragment.
- It carries **3 bytes of padding**.
- TSN is **21**.
- SI is **5**.
- SSN is **5**.
- The message is **"Hello"**.

Q.21) The following is a dump of an SCTP general header in hexadecimal format.

04320017 00000001 00000000

a. What is the source port number?

b. What is the destination port number?

c. What is the value of the verification tag?

d. What is the value of the checksum?

Let's analyze the provided dump of an SCTP general header:

Breaking down the fields:

1. **Source Port Number (first 4 bytes):**
   - `04320017`: Source port number in hexadecimal.
2. **Destination Port Number (next 4 bytes):**
   - `00000001`: Destination port number in hexadecimal.
3. **Verification Tag (next 4 bytes):**
   - `00000000`: Verification tag in hexadecimal.
4. **Checksum (last 4 bytes):**
   - `00000000`: Checksum in hexadecimal.

Now, let's answer the questions:

a. **Source Port Number?**

- The source port number is `0432` in hexadecimal, which is **1074 in decimal**.

b. **Destination Port Number?**

- The destination port number is `0001` in hexadecimal, which is **1 in decimal**.

c. **Verification Tag?**

- The verification tag is `00000000` in hexadecimal, which is **0 in decimal**.

d. **Checksum?**

- The checksum is `00000000` in hexadecimal, which is **0 in decimal**.

In summary:

- Source Port Number: **1074**
- Destination Port Number: **1**
- Verification Tag: **0**
- Checksum: **0**

Q.22) The state of a receiver is as follows:

a. The receiving queue has chunks 1 to 8, 11 to 14, and 16 to 20.

b. There are 1800 bytes of space in the queue.

c. The value of lastAck is 4.

d. No duplicate chunk has been received.

e. The value of cumTSN is 5.

Show the contents of the receiving queue and the variables.

Let's analyze the provided information about the state of the receiver:

a. **Receiving Queue:**

- Chunks in the receiving queue are non-contiguous and include chunks 1 to 8, 11 to 14, and 16 to 20.

b. **Space in the Queue:**

- There are 1800 bytes of space available in the receiving queue.

c. **lastAck:**

- The value of `lastAck` is 4.

d. **Duplicate Chunks:**

- No duplicate chunk has been received.

e. **cumTSN (Cumulative TSN):**

- The value of `cumTSN` is 5.

Now, let's summarize the information and draw some conclusions:

1. **Receiving Queue:**
    - Chunks 1 to 8, 11 to 14, and 16 to 20 are in the receiving queue.
    - The chunks are not contiguous, indicating potential gaps.
2. **Space in the Queue:**

- There is 1800 bytes of space available in the queue, suggesting the capacity for additional incoming data.

3. **lastAck:**
   - The value of `lastAck` is 4, indicating that chunks up to TSN 4 have been successfully received and acknowledged.
4. **Duplicate Chunks:**
   - No duplicate chunks have been received, which is a positive state.
5. **cumTSN (Cumulative TSN):**
   - The value of `cumTSN` is 5, indicating that chunks up to TSN 5 have been cumulatively acknowledged.

Based on this information, the receiver has successfully received and acknowledged chunks up to TSN 4. The receiving queue has some gaps (non-contiguous chunks), but there is available space for additional chunks. The absence of duplicate chunks and the acknowledgment of TSN 5 in `cumTSN` suggest that the receiver is in a relatively normal and functional state, awaiting additional chunks to fill the gaps in the receiving queue.

1. **Receiving Queue:**
   - Chunks in the receiving queue are non-contiguous and include chunks 1 to 8, 11 to 14, and 16 to 20.

   Receiving Queue: 1 2 3 4 5 6 7 8 11 12 13 14 16 17 18 19 20
2. **Space in the Queue:**
   - There are 1800 bytes of space available in the receiving queue.
3. **lastAck:**
   - The value of `lastAck` is 4.
4. **Duplicate Chunks:**
   - No duplicate chunks have been received.
5. **cumTSN (Cumulative TSN):**
   - The value of `cumTSN` is 5.

Show the contents of the SACK message sent by the receive

The contents of a Selective Acknowledgment (SACK) message sent by the receiver depend on the specific acknowledgment information for out-of-order or missing chunks. In this case, we have information about the state of the receiver, including the Cumulative TSN (cumTSN) value, the last acknowledgment (lastAck) value, and the receiving queue.

Given the information provided:

- Cumulative TSN (cumTSN): 5
- Last acknowledgment (lastAck): 4
- Receiving Queue: Chunks 1 to 8, 11 to 14, and 16 to 20

We can construct a simplified SACK message to acknowledge the received chunks:

SACK: cumTSN=5, lastAck=4, [1-8], [11-14], [16-20]

Explanation

- `cumTSN=5`: Indicates the Cumulative TSN Acknowledgment up to TSN 5.
- `lastAck=4`: Indicates the last successfully acknowledged TSN.
- `[1-8], [11-14], [16-20]`: Selective Acknowledgments for non-contiguous chunks in the receiving queue.

This SACK message acknowledges the receipt of chunks 1 to 8, 11 to 14, and 16 to 20. The receiver communicates the cumulative acknowledgment and selectively acknowledges specific out-of-order chunks. The actual SACK format may include additional information about gaps, duplicates, or other selective acknowledgments, but the provided information allows for a basic representation of the SACK message.

Q.23) The state of a sender is as follows:

a. The sending queue has chunks 18 to 23.

b. The value of curTSN is 20.

c. The value of the window size is 2000 bytes.

d. The value of inTransit is 200.

If each data chunk contains 100 bytes of data, how many DATA chunks can be sent

now? What is the next data chunk to be sent?

Let's analyze the provided information about the state of the sender:

a. **Sending Queue:**

- Chunks in the sending queue are 18 to 23.

b. **curTSN (Current Transmission Sequence Number):**

- The value of `curTSN` is 20.

c. **Window Size:**

- The value of the window size is 2000 bytes.

d. **inTransit:**

- The value of `inTransit` is 200.

e. **Data Chunk Size:**

- Each data chunk contains 100 bytes of data.

Now, let's calculate how many DATA chunks can be sent and determine the next data chunk to be sent:

1. **Calculate Available Window Size:**

- The available window size is the window size minus the amount in transit.
- Available Window Size = Window Size - inTransit = 2000 - 200 = 1800 bytes

2. **Calculate the Number of DATA Chunks that can be Sent:**
   - Number of DATA Chunks = Available Window Size / Data Chunk Size = 1800 / 100 = 18
3. **Determine the Next Data Chunk to be Sent:**
   - The `curTSN` is 20, and the sending queue has chunks 18 to 23.
   - The next data chunk to be sent is the one with the next sequential TSN after `curTSN`.
   - Next Data Chunk to be Sent = curTSN + 1 = 20 + 1 = 21

In summary:

- **Number of DATA Chunks that can be Sent:** 18
- **Next Data Chunk to be Sent:** 21

Q.24) An SCTP client opens an association using an initial tag of 806, an initial TSN of 14534, and a window size of 20000. The server responds with an initial tag of 2000, an initial TSN of 670, and a window size of 14000. Show the contents of all four packets exchanged during association establishment. Ignore the value of the cookie.

During association establishment in SCTP (Stream Control Transmission Protocol), a four-way handshake occurs involving the exchange of INIT, INIT ACK, COOKIE ECHO, and COOKIE ACK packets. Let's show the contents of these four packets exchanged between the client and the server:

1. **Client INIT Packet:**
   - Initial Tag: 806
   - Initial TSN: 14534
   - Window Size: 20000
   - (Additional parameters and information are present but ignored for simplicity)

   INIT: Initiate Tag=806, Initiate TSN=14534, Advertised Receiver Window Credit=20000
2. **Server INIT ACK Packet:**
   - Initial Tag: 2000 (chosen by the server)
   - Initial TSN: 670 (chosen by the server)
   - Window Size: 14000 (chosen by the server)
   - (Additional parameters and information are present but ignored for simplicity)

   INIT ACK: Initiate Tag=2000, Initiate TSN=670, Advertised Receiver Window Credit=14000
3. **Client COOKIE ECHO Packet:**
   - Initial Tag: 806
   - Initial TSN: 14534
   - Window Size: 20000
   - (Additional parameters and information are present but ignored for simplicity)

   COOKIE ECHO: Initiate Tag=806, Initiate TSN=14534, Advertised Receiver Window Credit=20000

4. **Server COOKIE ACK Packet:**
    - (Additional parameters and information are present but ignored for simplicity)

    COOKIE ACK

These packets represent the exchange during association establishment. The client initiates the association with an INIT packet, and the server responds with an INIT ACK packet. The client then sends a COOKIE ECHO packet, and the server acknowledges it with a COOKIE ACK packet. Note that the actual packets would contain more fields and information, but we've focused on the key parameters related to the association establishment process.

Q.25) If the client in the previous question sends 7600 data chunks and the server sends 570 data chunks, show the contents of the three packets exchanged during association termination.

During association termination in SCTP (Stream Control Transmission Protocol), a three-way handshake occurs involving the exchange of SHUTDOWN, SHUTDOWN ACK, and SHUTDOWN COMPLETE packets. Let's show the contents of these three packets exchanged between the client and the server after the client sends 7600 data chunks and the server sends 570 data chunks:

1. **Client SHUTDOWN Packet:**
    - (The client initiates the termination process by sending a SHUTDOWN packet)
    - (Additional parameters and information are present but ignored for simplicity)

SHUTDOWN

2. **Server SHUTDOWN ACK Packet:**
    - (The server acknowledges the receipt of the SHUTDOWN packet and responds with a SHUTDOWN ACK)
    - (Additional parameters and information are present but ignored for simplicity)

SHUTDOWN ACK

Client SHUTDOWN COMPLETE Packet:

- (The client acknowledges the SHUTDOWN ACK, indicating the completion of the association termination)
- (Additional parameters and information are present but ignored for simplicity)

SHUTDOWN COMPLETE

These packets represent the exchange during association termination. The client initiates the termination by sending a SHUTDOWN packet, and the server responds with a SHUTDOWN ACK. Finally, the client acknowledges the SHUTDOWN ACK by sending a SHUTDOWN COMPLETE packet. Again, note that the actual packets would contain more fields and information, but we've focused on the key parameters related to the association termination process.