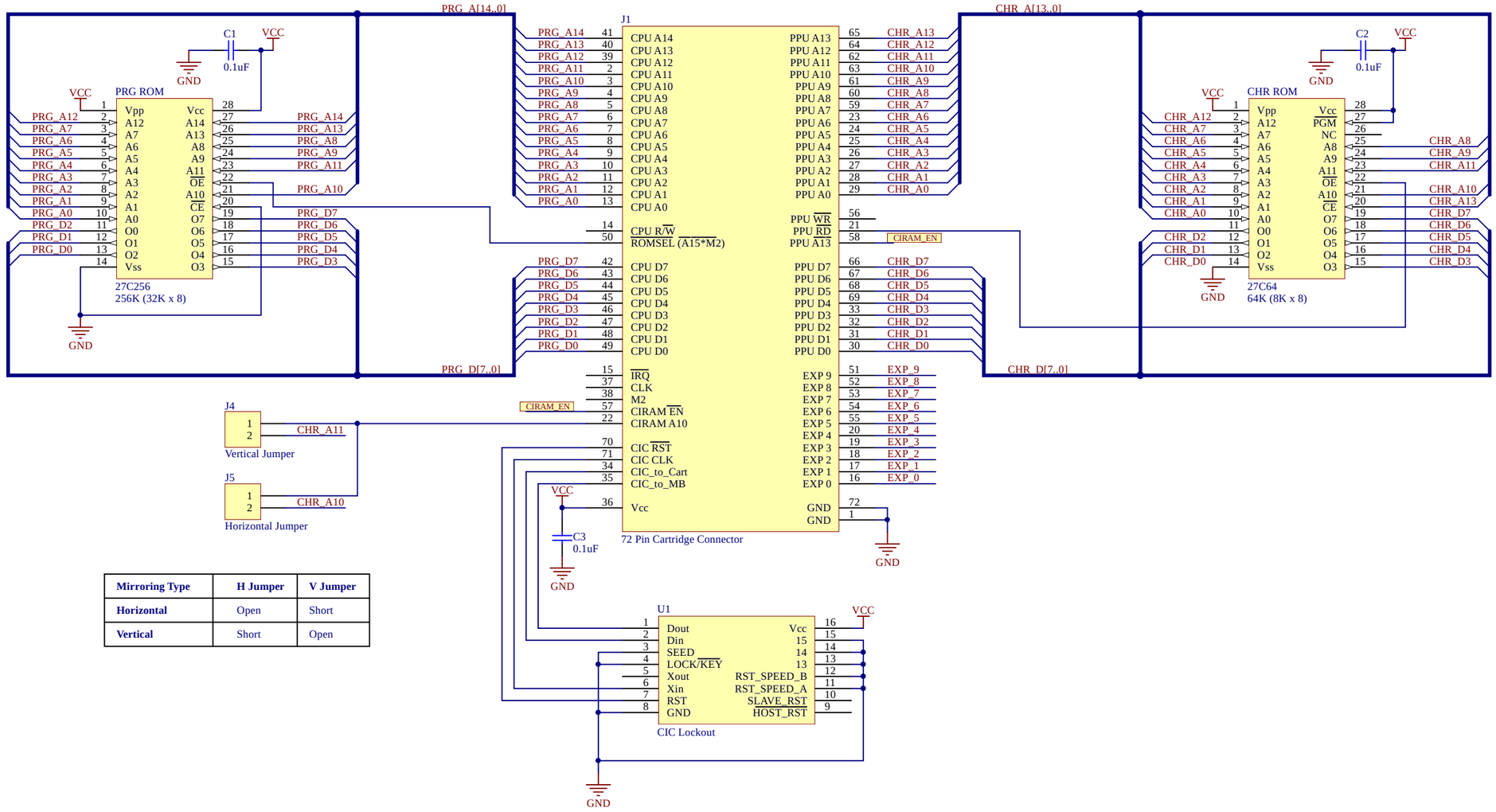

Mirroring Type	H Jumper	V Jumper
Horizontal	Open	Short
Vertical	Short	Open

Title *NES-NROM-256 Cartridge*		
Size: Ledger	Drawn By: M. Spinks	Revision: 1-0-0
Date: 9/12/2017	Time: 9:16:57 PM	Sheet 1 of 1
File: NES-NROM-256.SchDoc		

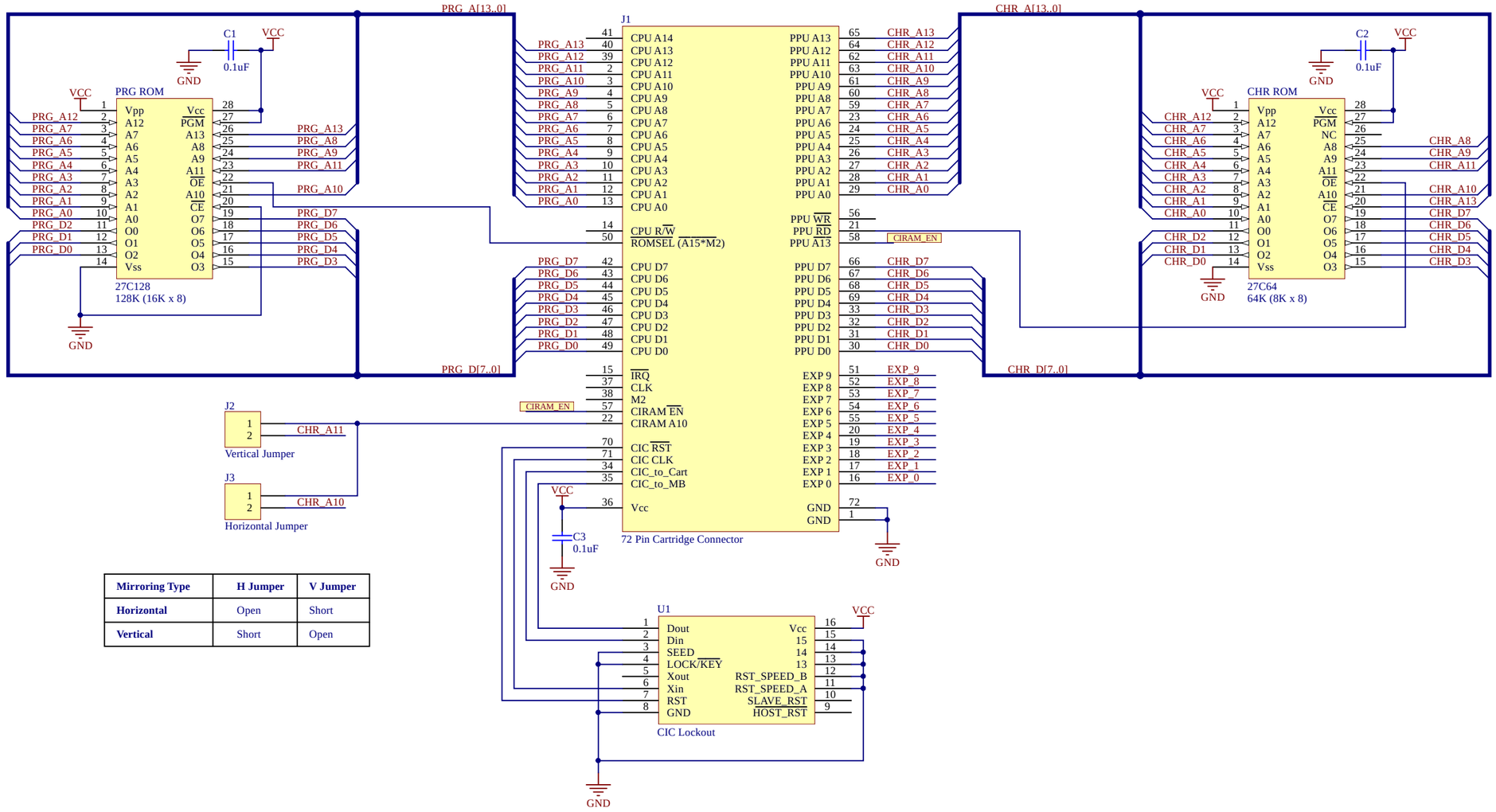

Mirroring Type	H Jumper	V Jumper
Horizontal	Open	Short
Vertical	Short	Open

Title *NES-NROM-128 Cartridge*

Size: Ledger | Drawn By: M. Spinks | Revision: 1-0-0

Date: 9/12/2017 | Time: 9:16:57 PM | Sheet 1 of 1

File: NES-NROM-128.SchDoc