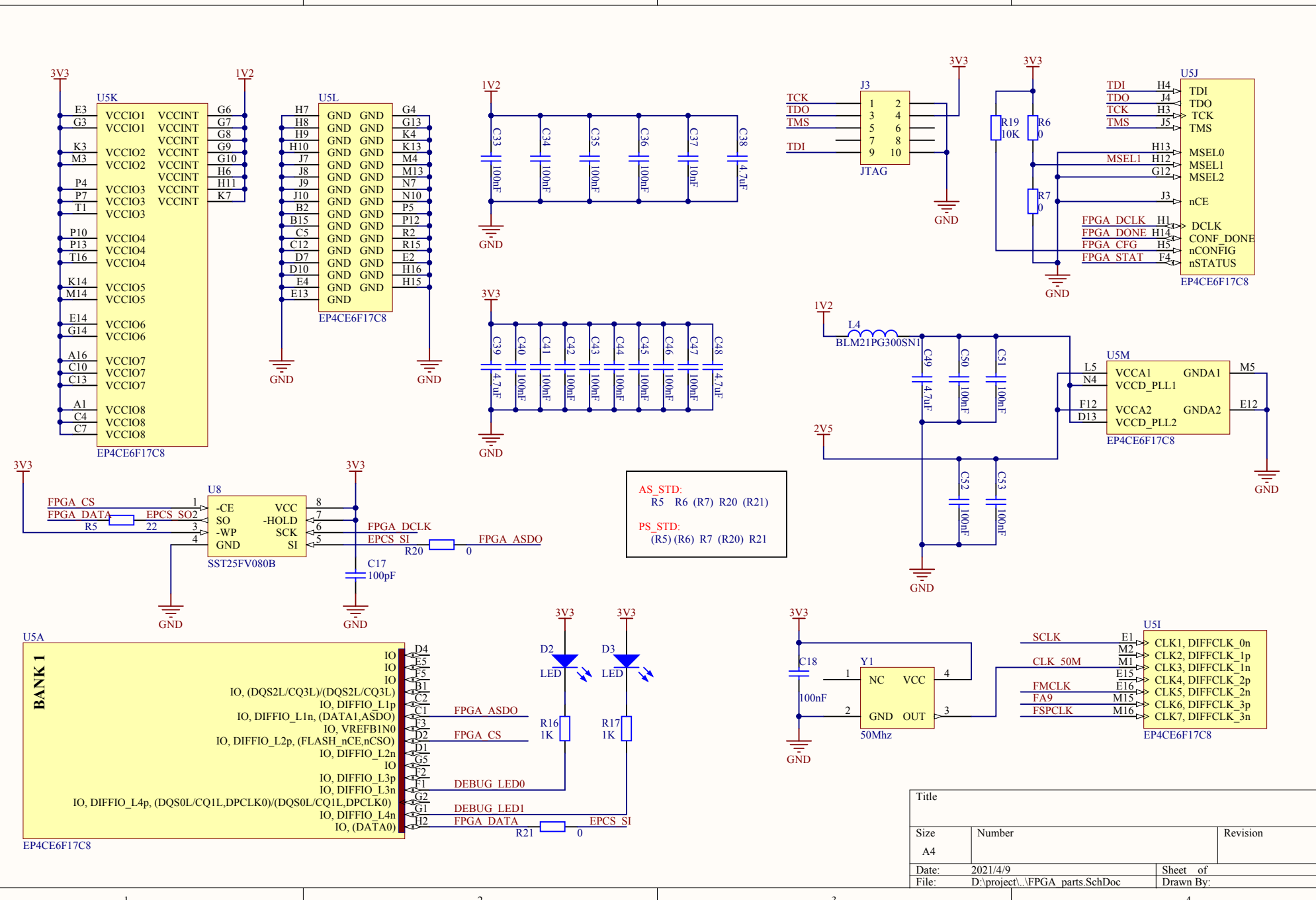
U5K
EP4CE6F17C8
U5L
EP4CE6F17C8
J3
JTAG
U5J
EP4CE6F17C8
U5M
EP4CE6F17C8
U8
SST25FV080B
AS_STD:
R5 R6 (R7) R20 (R21)
PS_STD:
(R5) (R6) R7 (R20) R21
U5A
BANK 1
EP4CE6F17C8
Y1
50Mhz
U5I
EP4CE6F17C8
Title
Size
A4
Number
Revision
Date: 2021/4/9
File: D:\project\..\FPGA_parts.SchDoc
Sheet of
Drawn By:

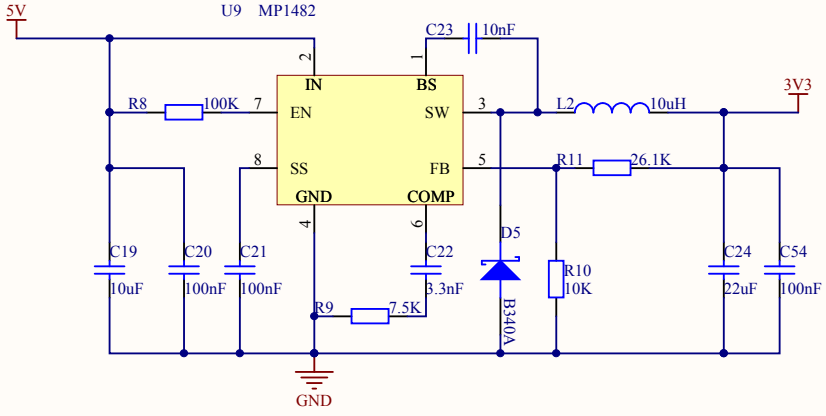

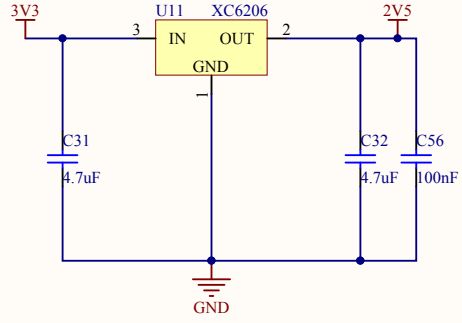

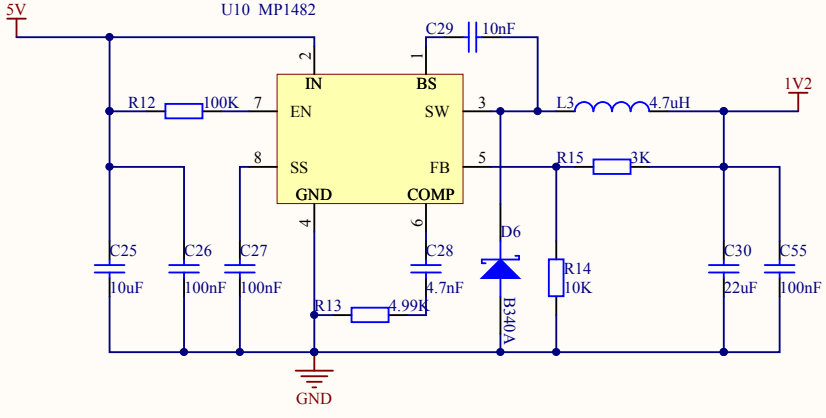

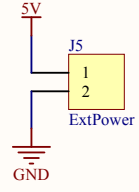

Title		
Size: A4	Number	Revision
Date: 2021/4/9	Sheet of	
File: D:\project\SAROO_work\HW\Power.Sch	Drawn By:	

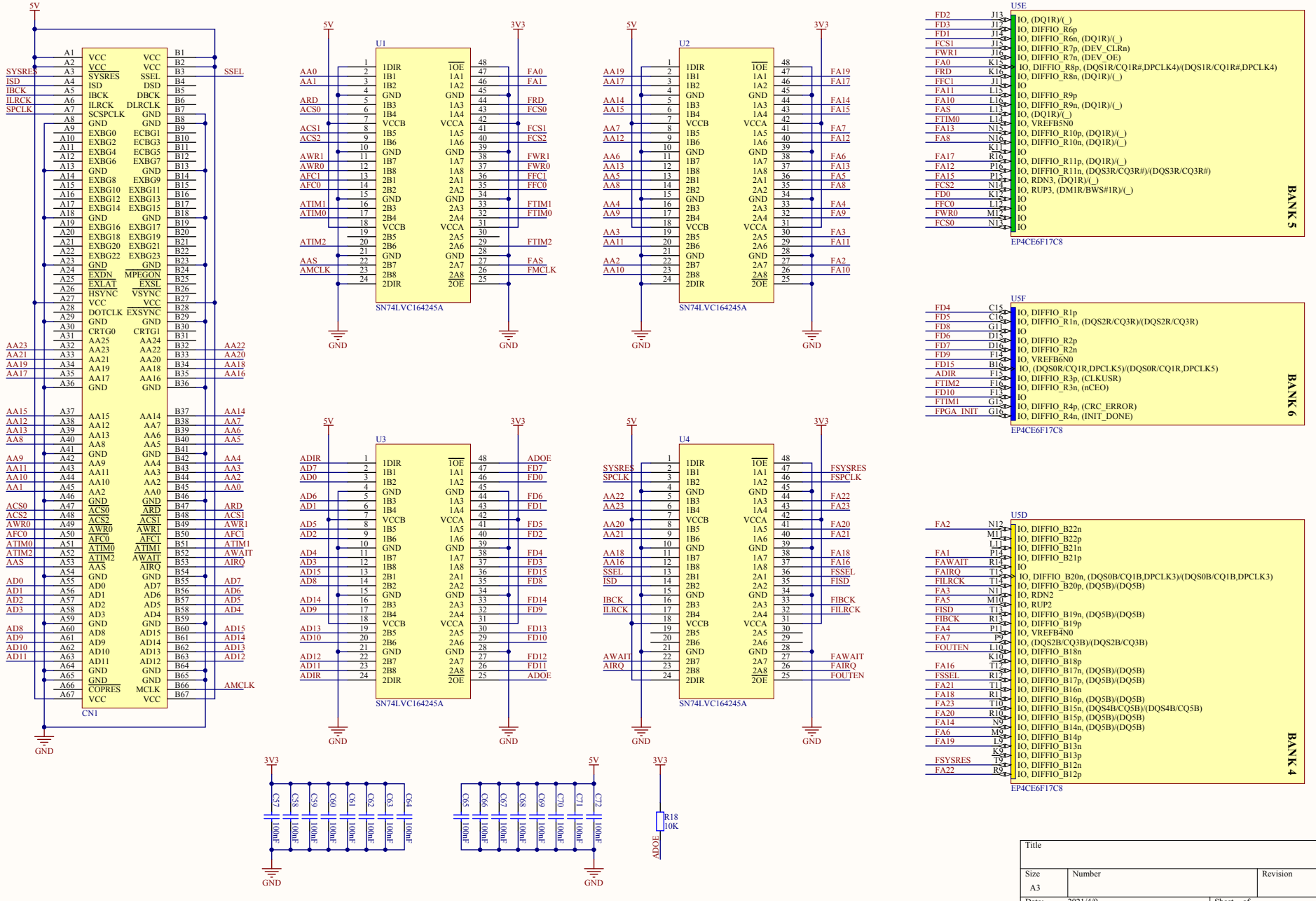

Title			
Size A3	Number		Revision
Date: 2021/4/9		Sheet of	
File: D:\project\..\Saturn_Cartage.SchDoc		Drawn By:	

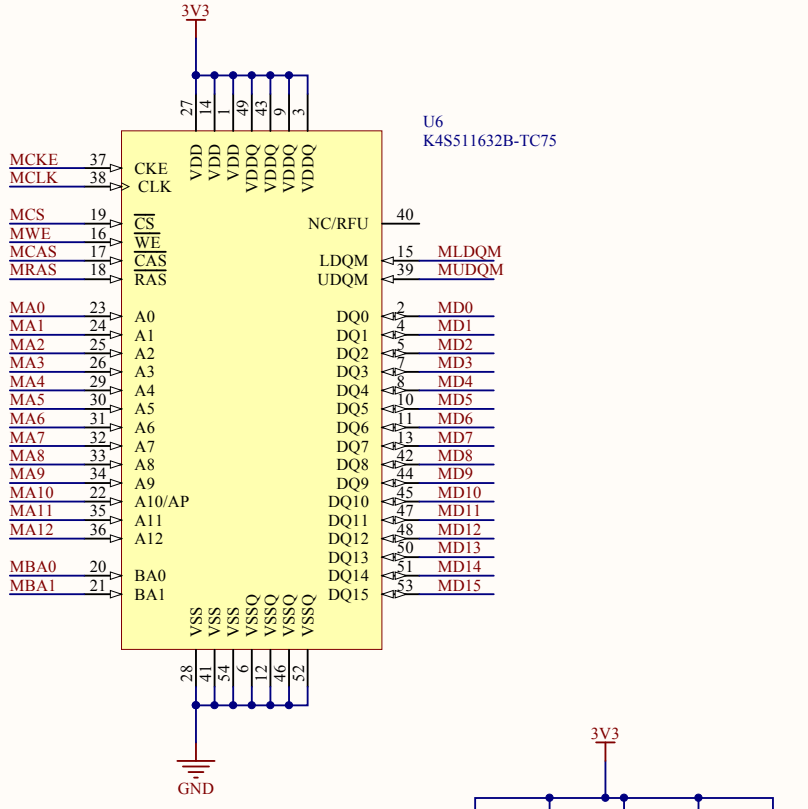

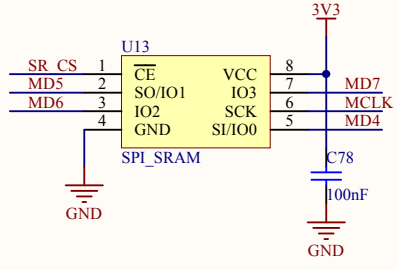

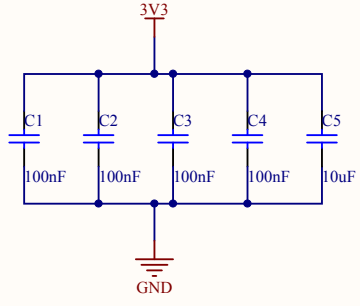

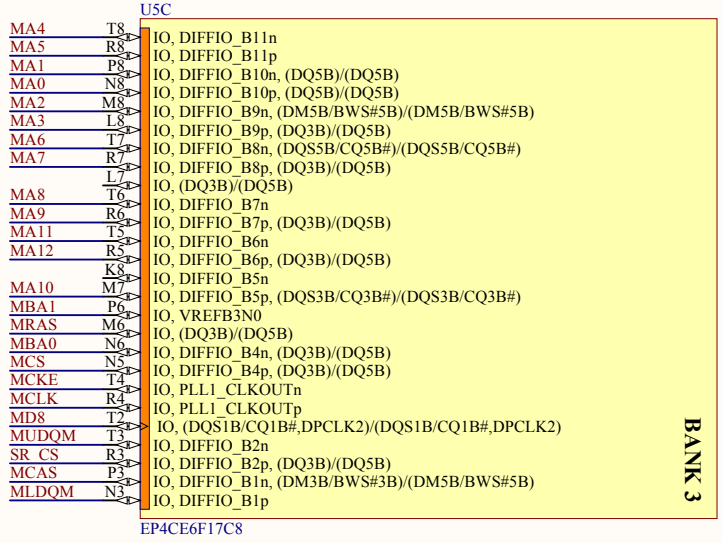

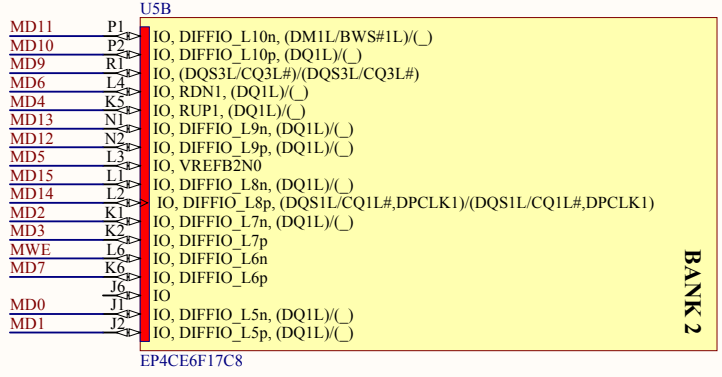

Title		
Size: A4	Number	Revision
Date: 2021/4/9		Sheet of
File: D:\project\SAROO_work\HW\SDRAM.SchDoc		Drawn By:

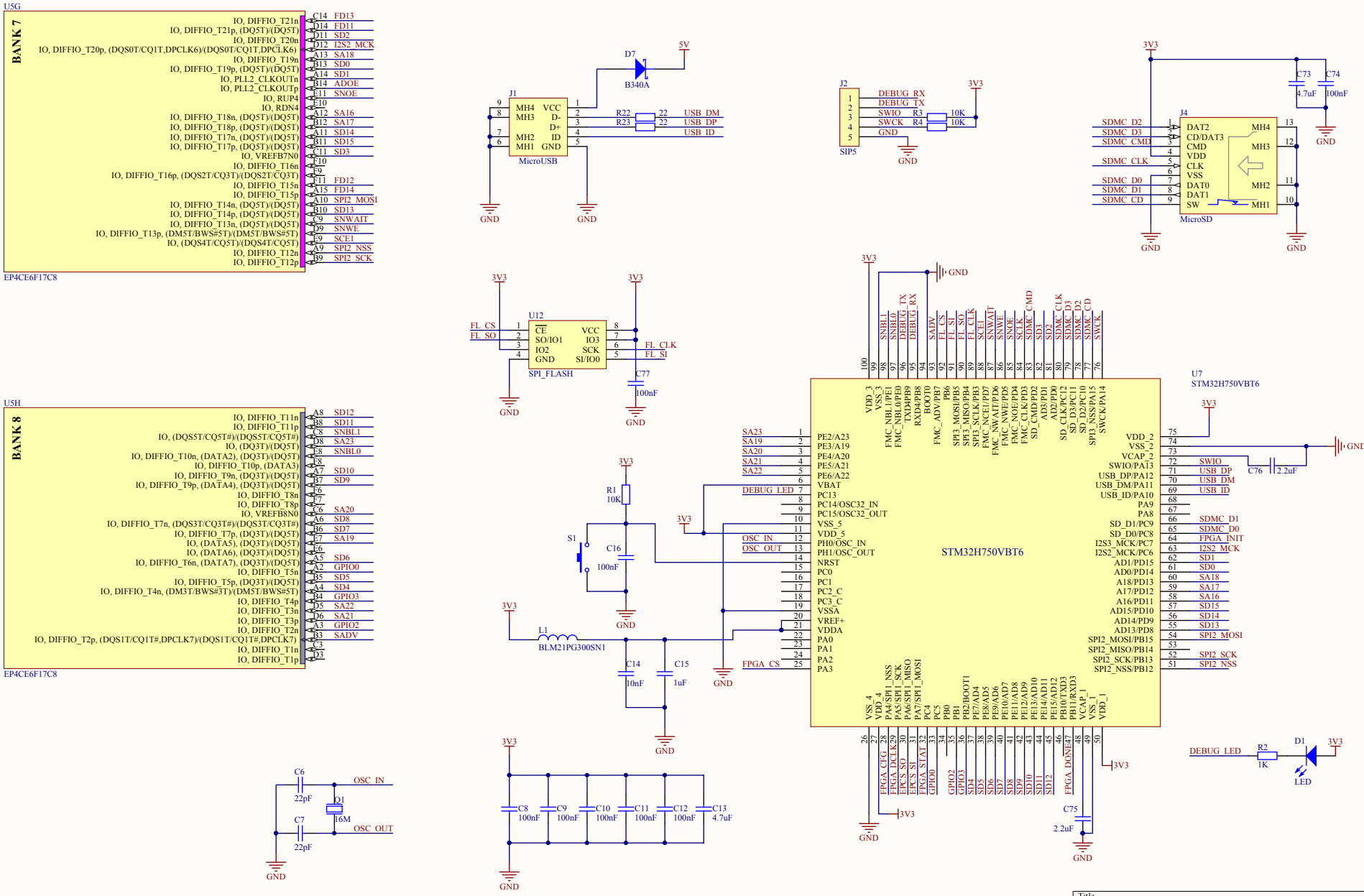
U5G
BANK 7
IO, DIFFIO_T21n
IO, DIFFIO_T21p, (DQ5T)/(DQ5T)
IO, DIFFIO_T20n
IO, DIFFIO_T20p, (DQS0T/CQ1T,DPCLK6)/(DQS0T/CQ1T,DPCLK6)
IO, DIFFIO_T19n
IO, DIFFIO_T19p, (DQ5T)/(DQ5T)
IO, PLL2_CLKOUTn
IO, PLL2_CLKOUTp
IO, RUP4
IO, RDN4
IO, DIFFIO_T18n, (DQ5T)/(DQ5T)
IO, DIFFIO_T18p, (DQ5T)/(DQ5T)
IO, DIFFIO_T17n, (DQ5T)/(DQ5T)
IO, DIFFIO_T17p, (DQ5T)/(DQ5T)
IO, VREFB7N0
IO, DIFFIO_T16n
IO, DIFFIO_T16p, (DQS2T/CQ3T)/(DQS2T/CQ3T)
IO, DIFFIO_T15n
IO, DIFFIO_T15p
IO, DIFFIO_T14n, (DQ5T)/(DQ5T)
IO, DIFFIO_T14p, (DQ5T)/(DQ5T)
IO, DIFFIO_T13n, (DQ5T)/(DQ5T)
IO, DIFFIO_T13p, (DM5T/BWS#5T)/(DM5T/BWS#5T)
IO, (DQS4T/CQ5T)/(DQS4T/CQ5T)
IO, DIFFIO_T12n
IO, DIFFIO_T12p
C14 FD13
D14 FD11
D11 SD2
D12 I2S2_MCK
A13 SA18
B13 SD0
A14 SD1
B14 ADOE
E11 SNOE
E10
F10
F9
F11 FD12
A15 FD14
A10 SPI2_MOSI
B10 SD13
C9 SNWAIT
D9 SNWE
E9 SCE1
A9 SPI2_NSS
B9 SPI2_SCK
EP4CE6F17C8
U5H
BANK 8
IO, DIFFIO_T11n
IO, DIFFIO_T11p
IO, (DQS5T/CQ5T#)/(DQS5T/CQ5T#)
IO, (DQ3T)/(DQ5T)
IO, DIFFIO_T10n, (DATA2), (DQ3T)/(DQ5T)
IO, DIFFIO_T10p, (DATA3)
IO, DIFFIO_T9n, (DQ3T)/(DQ5T)
IO, DIFFIO_T9p, (DATA4), (DQ3T)/(DQ5T)
IO, DIFFIO_T8n
IO, DIFFIO_T8p
IO, VREFB8N0
IO, DIFFIO_T7n, (DQS3T/CQ3T#)/(DQS3T/CQ3T#)
IO, DIFFIO_T7p, (DQ3T)/(DQ5T)
IO, (DATA5), (DQ3T)/(DQ5T)
IO, (DATA6), (DQ3T)/(DQ5T)
IO, DIFFIO_T6n, (DATA7), (DQ3T)/(DQ5T)
IO, DIFFIO_T5n
IO, DIFFIO_T5p, (DQ3T)/(DQ5T)
IO, DIFFIO_T4n, (DM3T/BWS#3T)/(DM5T/BWS#5T)
IO, DIFFIO_T4p
IO, DIFFIO_T3n
IO, DIFFIO_T3p
IO, DIFFIO_T2n
IO, DIFFIO_T2p, (DQS1T/CQ1T#,DPCLK7)/(DQS1T/CQ1T#,DPCLK7)
IO, DIFFIO_T1n
IO, DIFFIO_T1p
A8 SD12
B8 SD11
C8 SNBL1
D8 SA23
E8 SNBL0
F8
A7 SD10
B7 SD9
F6
F7
A6 SA20
A6 SD8
B6 SD7
E7 SA19
F6
A5 SD6
A2 GPIO0
B5 SD5
A4 SD4
B4 GPIO3
D5 SA22
D6 SA21
A3 GPIO2
B3 SADV
C3
B2
D3
EP4CE6F17C8
J1
MicroUSB
MH4 VCC
MH3 D-
D+
MH2 ID
MH1 GND
D7
B340A
5V
R22 22 USB_DM
R23 22 USB_DP
USB_ID
J2
SIP5
DEBUG_RX
DEBUG_TX
SWIO R3 10K
SWCK R4 10K
GND
3V3
J4
MicroSD
DAT2
CD/DAT3
CMD
VDD
CLK
VSS
DAT0
DAT1
SW
MH4
MH3
MH2
MH1
SDMC_D2
SDMC_D3
SDMC_CMD
SDMC_CLK
SDMC_D0
SDMC_D1
SDMC_CD
C73 4.7uF
C74 100nF
U12
SPI_FLASH
CE
SO/IO1
IO2
GND
VCC
IO3
SCK
SI/IO0
FL_CS
FL_SO
FL_CLK
FL_SI
C77 100nF
U7
STM32H750VBT6
SNBL1
SNBL0
DEBUG_TX
DEBUG_RX
SADV
FL_CS
FL_SI
FL_SO
FL_CLK
SCE1
SNWAIT
SNWE
SNOE
SCLK
SDMC_CMD
SD3
SD2
SDMC_CLK
SDMC_D3
SDMC_D2
SDMC_CD
SWCK
SA23
SA19
SA20
SA21
SA22
DEBUG_LED
OSC_IN
OSC_OUT
FPGA_CS
R1 10K
S1
C16 100nF
L1
BLM21PG300SN1
C14 10nF
C15 1uF
C6 22pF
C7 22pF
Q1 16M
OSC_IN
OSC_OUT
C8 100nF
C9 100nF
C10 100nF
C11 100nF
C12 100nF
C13 4.7uF
C75 2.2uF
C76 2.2uF
DEBUG_LED
R2 1K
D1
LED
FPGA_CEG
FPGA_DCLK29
EPCS_SO
EPCS_SI
FPGA_STAT
GPIO0
GPIO2
GPIO3
SD4
SD5
SD6
SD7
SD8
SD9
SD10
SD11
SD12
FPGA_DONE
Title
Size
A3
Number
Revision
Date: 2021/4/9
File: D:\project\SAROO_work\HW\STM32.SchDoc
Sheet of
Drawn By:

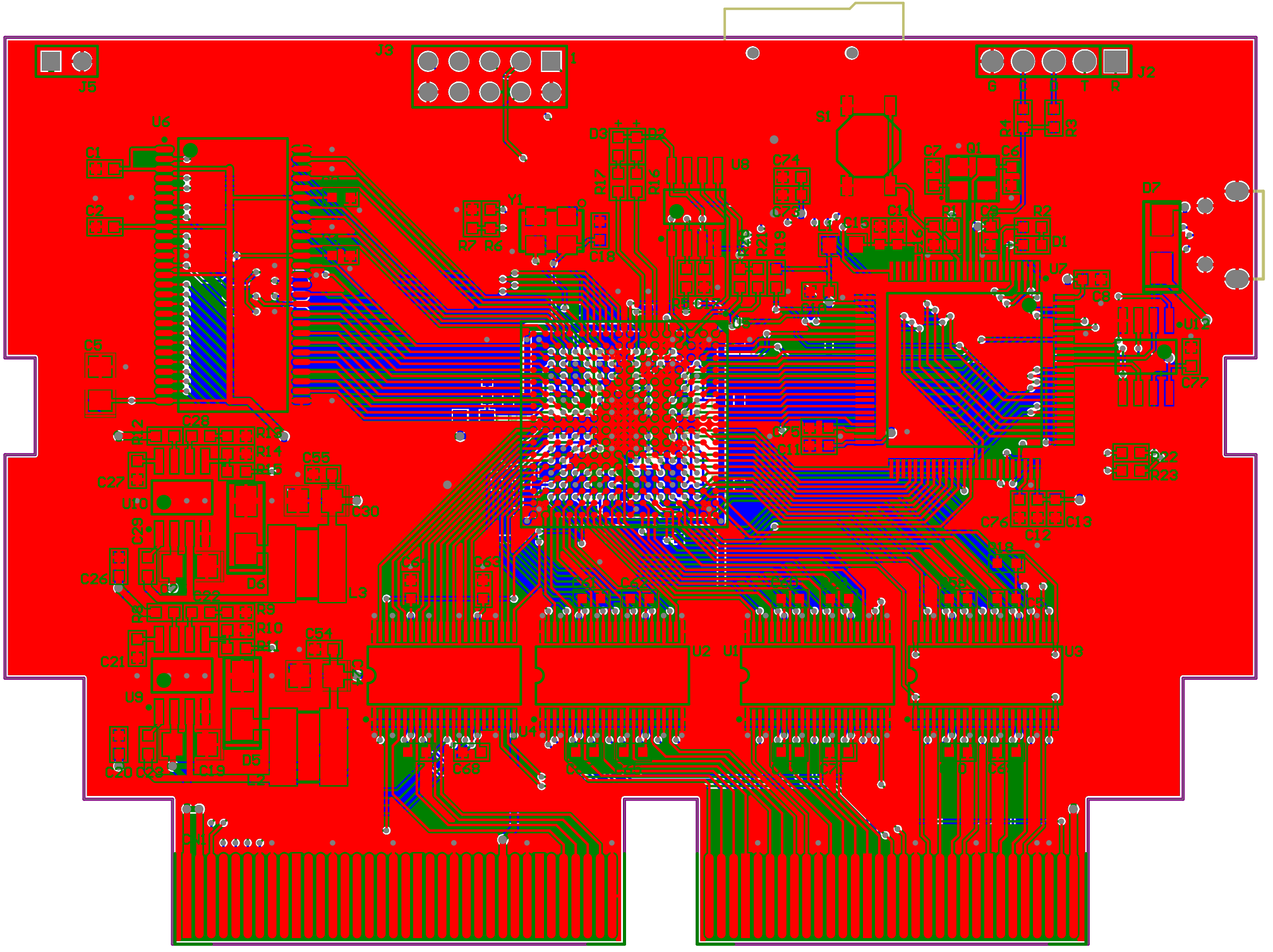
J3
J5
J2
U6
S1
D3
D2
U8
C24
C7
C6
D1
D7
Y1
R7
R6
C16
C15
C1
R2
U7
C8
U1
C7
C5
C2
C28
R13
R14
R15
C55
C27
U10
C30
C26
D6
L3
R9
R10
R11
C54
C21
U9
D5
C20
C22
C19
L2
C9
C63
C62
C68
U2
U1
U3
U4
C76
C13
C12
C22
C23
C6

Comment	Description	Designator	Footprint	LibRef	Quantity
100nF	Capacitor	C1, C2, C3, C4, C8, C9, C10, C11, C12, C16, C18, C20, C21, C26, C27, C33, C34, C35, C36, C40, C41, C42, C43, C44, C45, C46, C47, C50, C51, C52, C53, C54, C55, C56, C57, C58, C59, C60, C61, C62, C63, C64, C65, C66, C67, C68, C69, C70, C71, C72, C74, C77, C78	C0603	Cap	53
10uF	Capacitor	C5, C19, C25	C1206	Cap	3
22pF	Capacitor	C6, C7	C0603	Cap	2
4.7uF	Capacitor	C13, C31, C32, C38, C39, C48, C49, C73	C0603	Cap	8
10nF	Capacitor	C14, C23, C29, C37	C0603	Cap	4
1uF	Capacitor	C15	C0603	Cap	1
100pF	Capacitor	C17	C0603	Cap	1
3.3nF	Capacitor	C22	C0603	Cap	1
22uF	Capacitor	C24, C30	C1206	Cap	2
4.7nF	Capacitor	C28	C0603	Cap	1
2.2uF	Capacitor	C75, C76	C0603	Cap	2
SaturnCartage		CN1	Saturn_cart	SaturnCartage	1
LED	Typical RED GaAs LED	D1, D2, D3	D0603	LED1	3
B340A	Schottky Diode	D5, D6, D7	SMA	DIODE SCHOTTKY	3
MicroUSB	USB micro female SMT with 4 fixed foot	J1	USB_MICRO_5S_B	USB_Micro_5S_B	1
SIP5		J2	SIP5	SIP5	1
JTAG	Header, 5-Pin, Dual row	J3	HDR2X5	Header 5X2	1
MicroSD	MicroSD	J4	MicroSD-1	MicroSD	1
ExtPower	Header, 2-Pin	J5	HDR1X2	Header 2	1
BLM21PG300SN1	Inductor	L1, L4	R0805	Inductor	2
10uH	Inductor	L2	CDRH5D28	Inductor	1
4.7uH	Inductor	L3	CDRH5D28	Inductor	1
16M	XTAL SMD 2016, 32MHz, CI=8pF, Total Tol: ±40ppm	Q1	SMD3225	XTAL_SMD2016_32MHz_8pF_General	1
10K	Resistor	R1, R3, R4, R10, R14, R18, R19	R0603	Res2	7
1K	Resistor	R2, R16, R17	R0603	Res2	3
22	Resistor	R5, R22, R23	R0603	Res2	3
0	Resistor	R6, R7, R20, R21	R0603	Res2	4
100K	Resistor	R8, R12	R0603	Res2	2
7.5K	Resistor	R9	R0603	Res2	1
26.1K	Resistor	R11	R0603	Res2	1
4.99K	Resistor	R13	R0603	Res2	1
3K	Resistor	R15	R0603	Res2	1
SW-PB	Switch	S1	SW4_5X5	SW-PB	1
SN74LVC164245A		U1, U2, U3, U4	DGG048	SN74LVC164245A	4
EP4CE6F17C8	Cyclone IV Family FPGA, 2V Core, 179 I/O Pins, 2 PLLs, 256-Pin FBGA, Speed Grade 8, Commercial Grade	U5	FBGA256	EP4CE6F17C8	1
K4S511632B-TC75	512Mb Synchronous High Data Rate DRAM, 8Mb x 16Bit x 4 Banks, 54-Pin TSOP	U6	54_TSOP2_400AF_N	K4S511632B-TC75	1
STM32H750VBT6		U7	TQFP-100	STM32H750VBT6	1
SST25FV080B		U8	SOIC-8	SST25FV080B	1
MP1482		U9, U10	SOIC-8	MP1482	2
XC6206	LDO	U11	sot-23-xc6206	XC6206	1
SPI_FLASH		U12	SOIC-8	SPIMEM	1
SPI_SRAM		U13	sop-8_n	SPIMEM	1
50Mhz		Y1	OSC_5032	JZSMD5X7	1