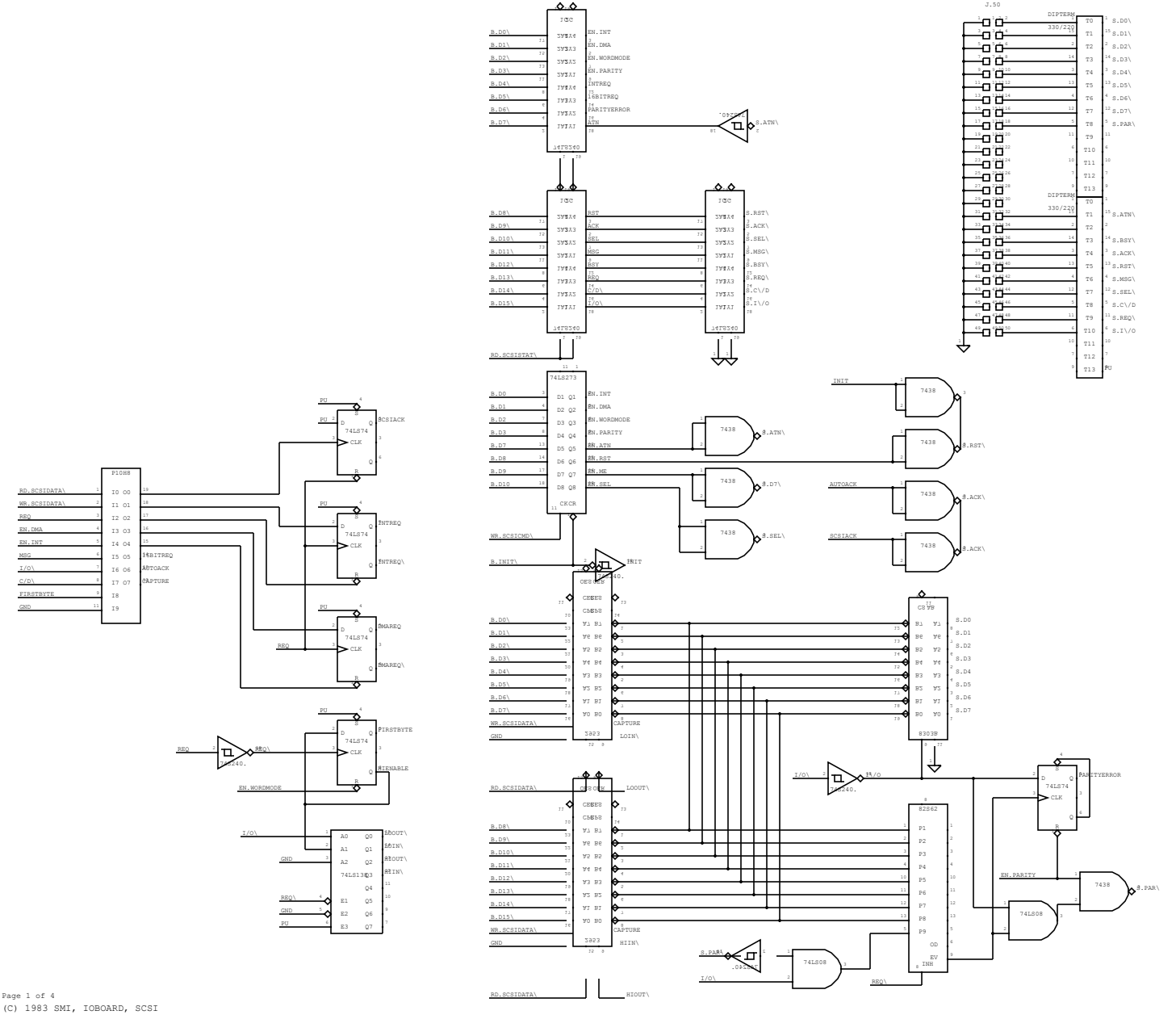

(C) 1983 SMI, IOBOARD, SCSI

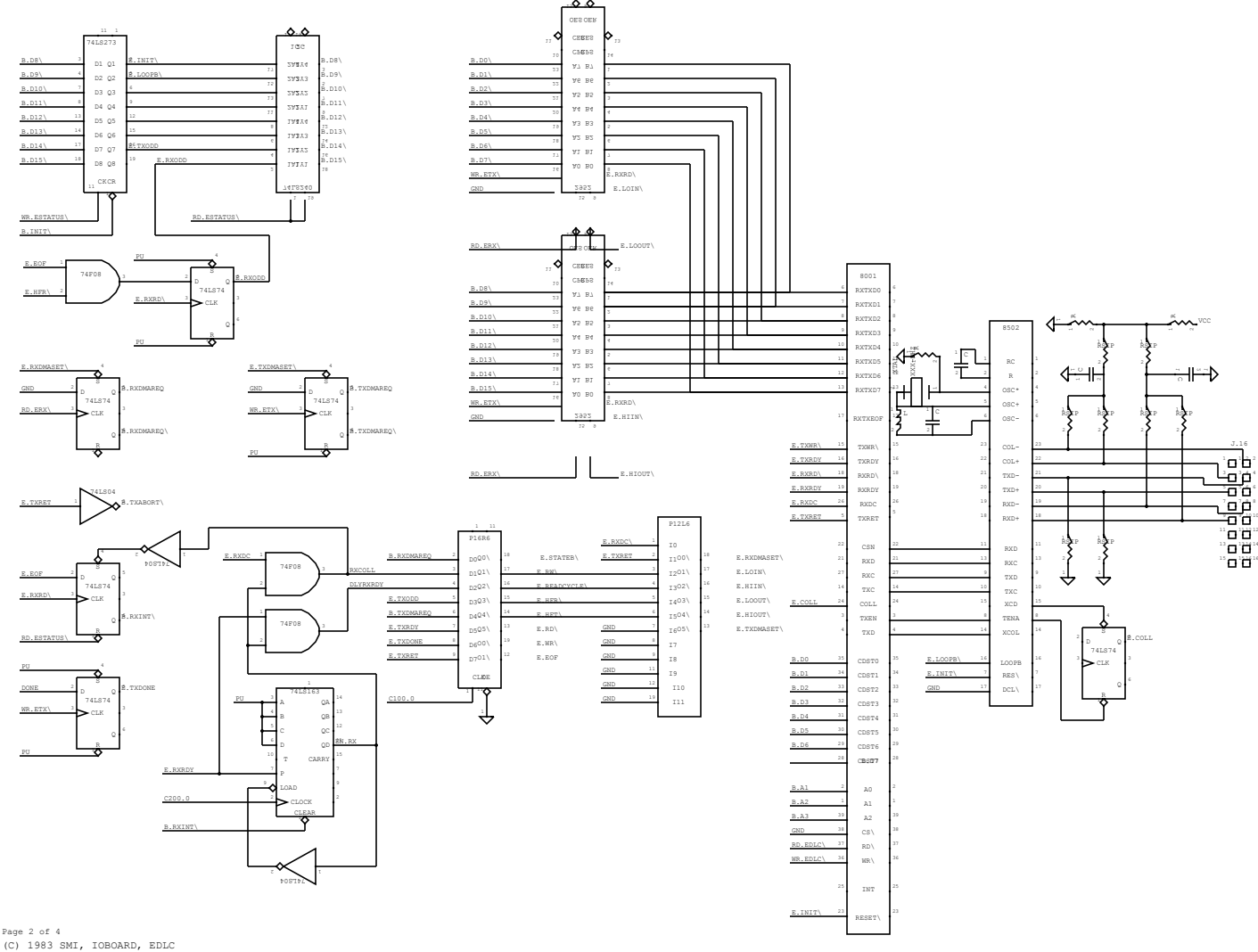

(C) 1983 SMI, IOBOARD, EDLC

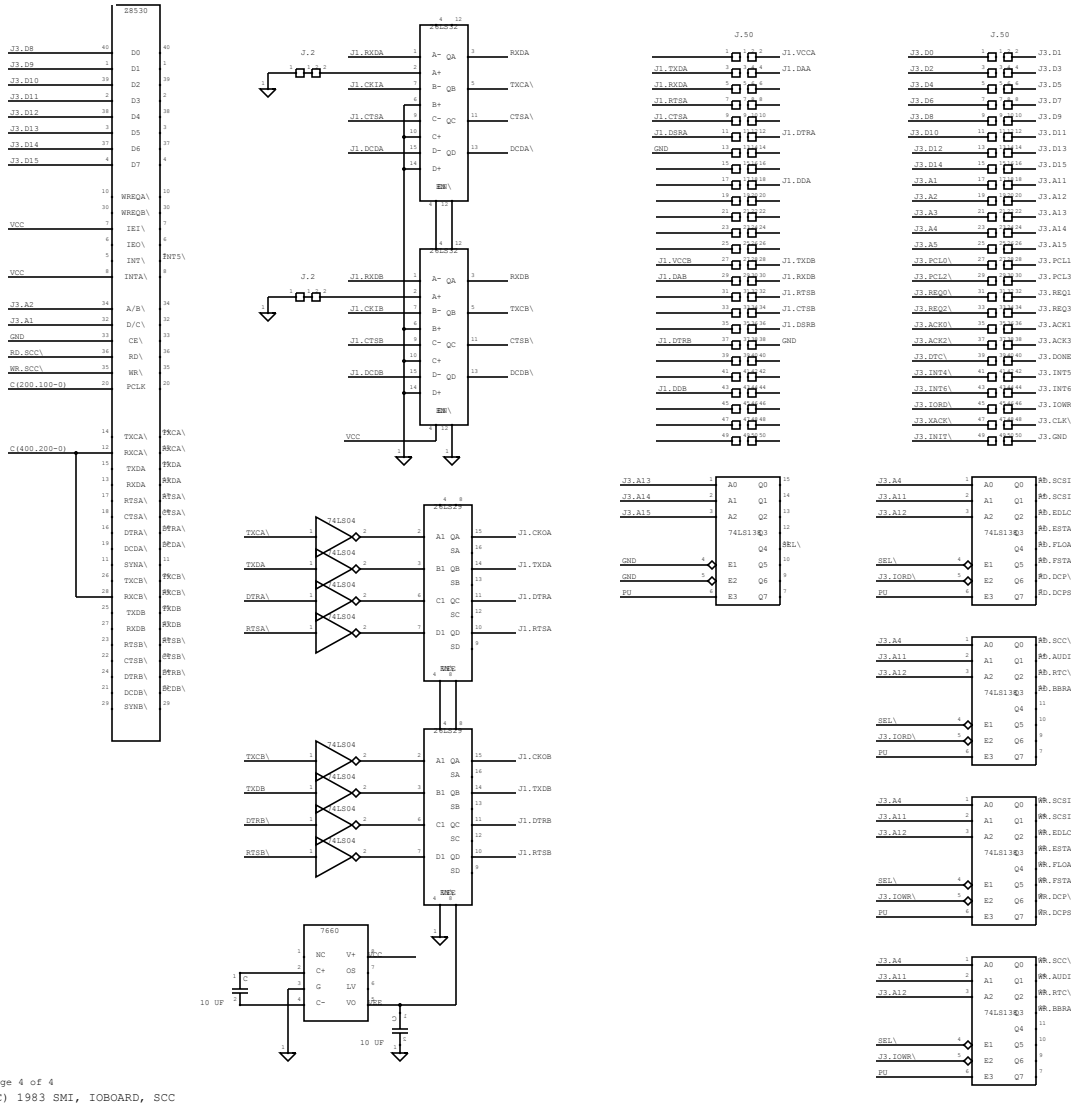

(C) 1983 SMI, IOBOARD, SCC