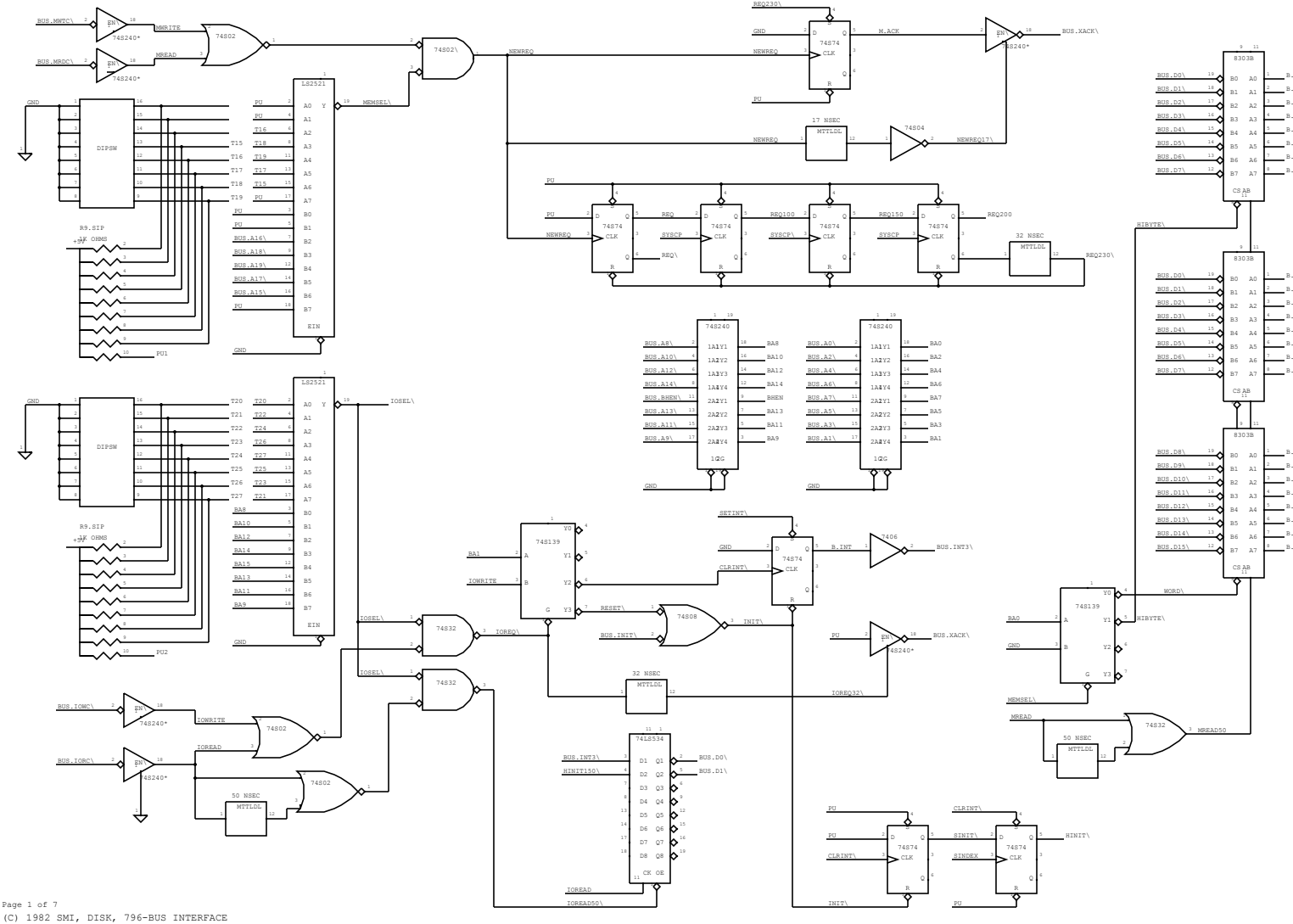

(C) 1982 SMI, DISK, 796-BUS INTERFACE

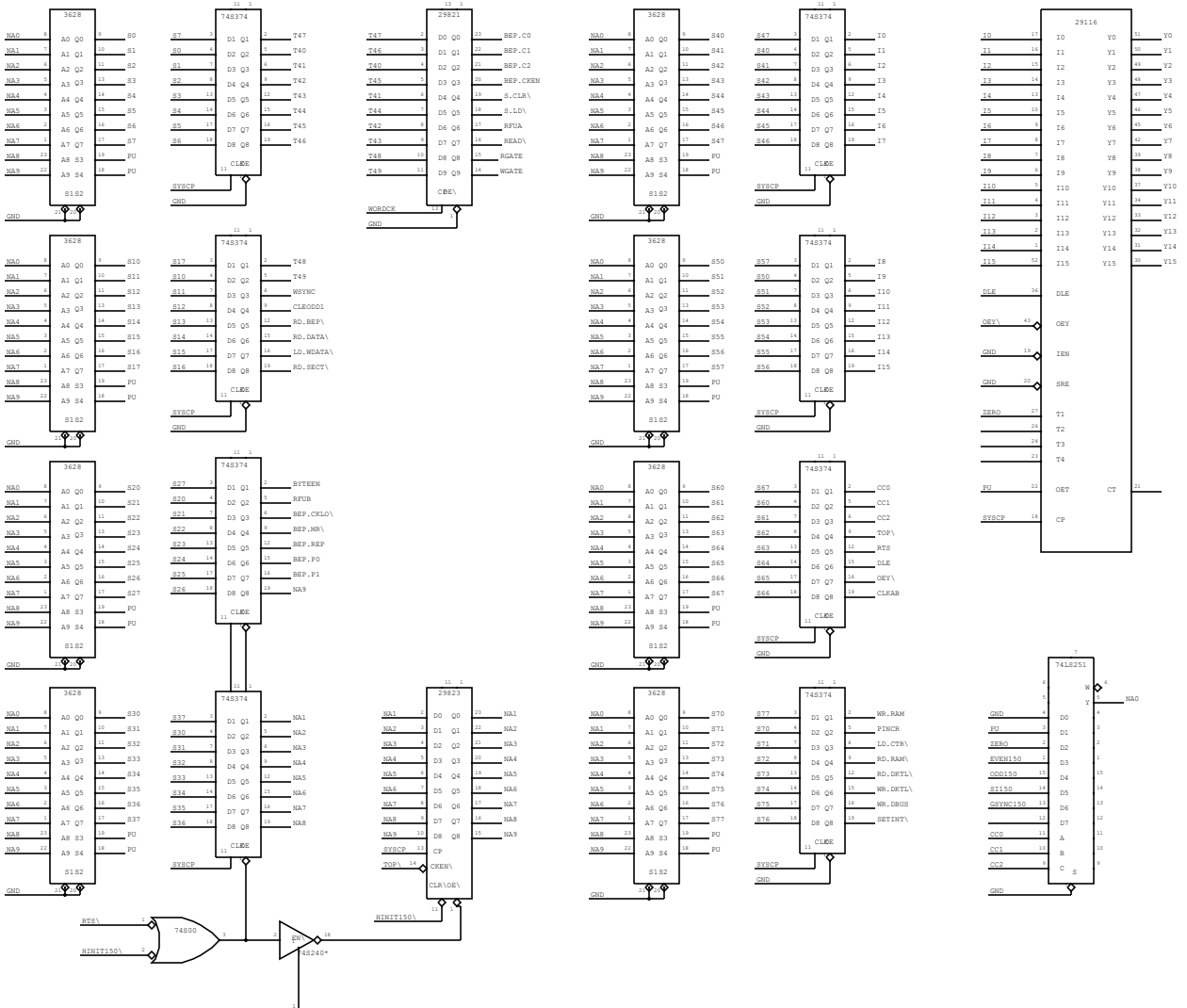

(C) 1982 SMI, DISK, MICROCODE SNAFU

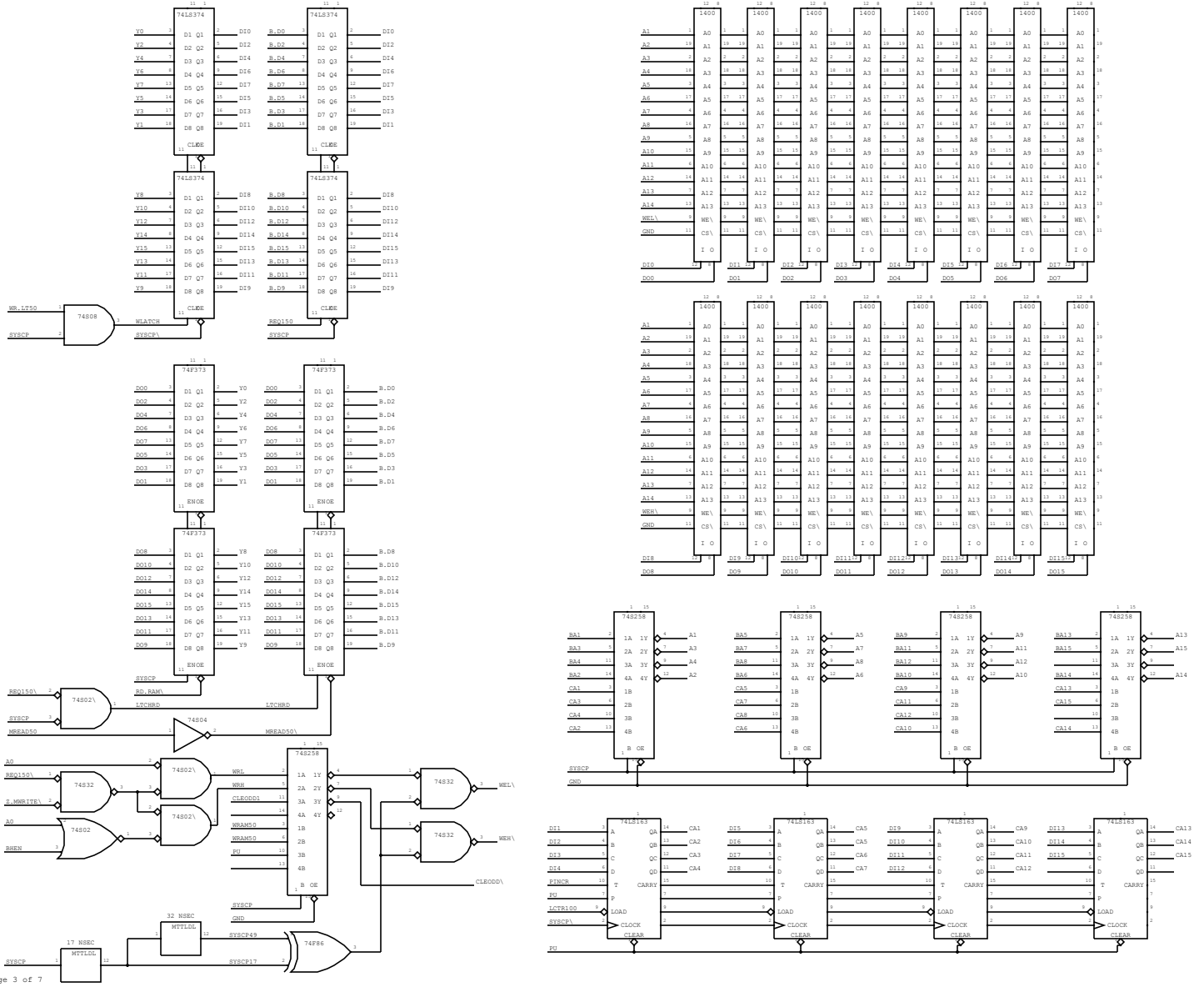

(C) 1982 SMI, DISK, MEMORY.

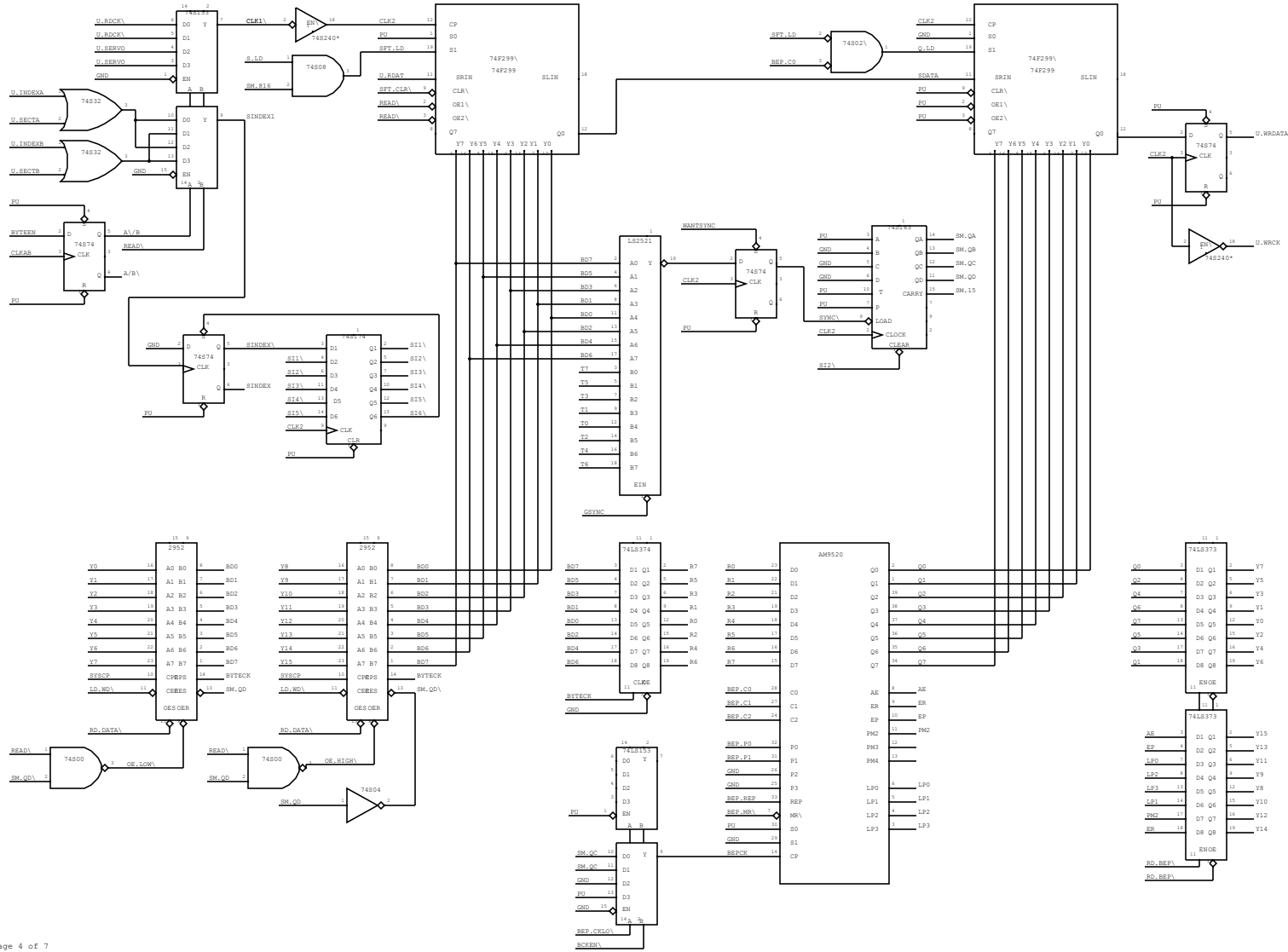

(C) 1982 SMI, DISK, DISK DRIVE INTERFACE.

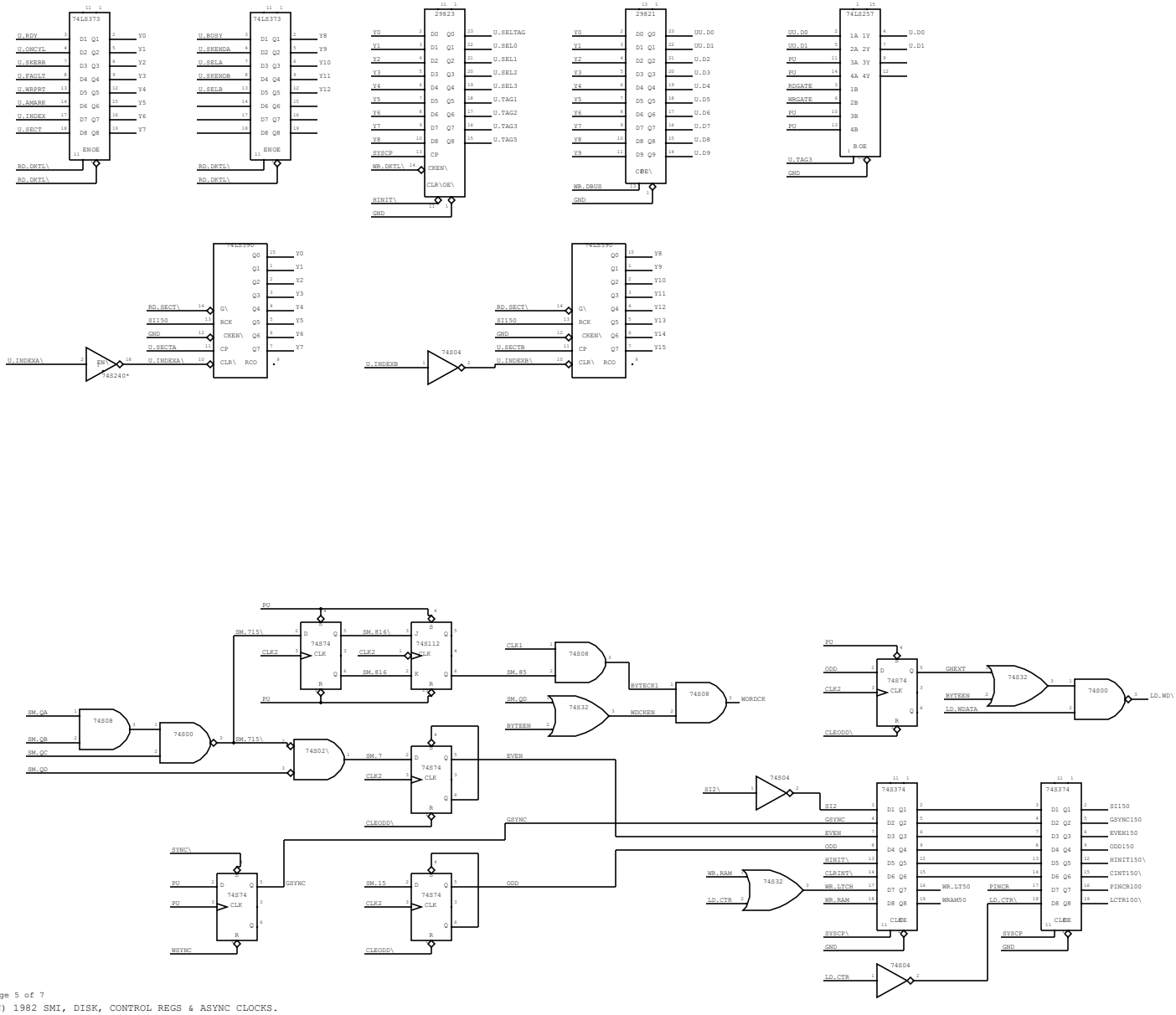

(C) 1982 SMI, DISK, CONTROL REGS & ASYNC CLOCKS.

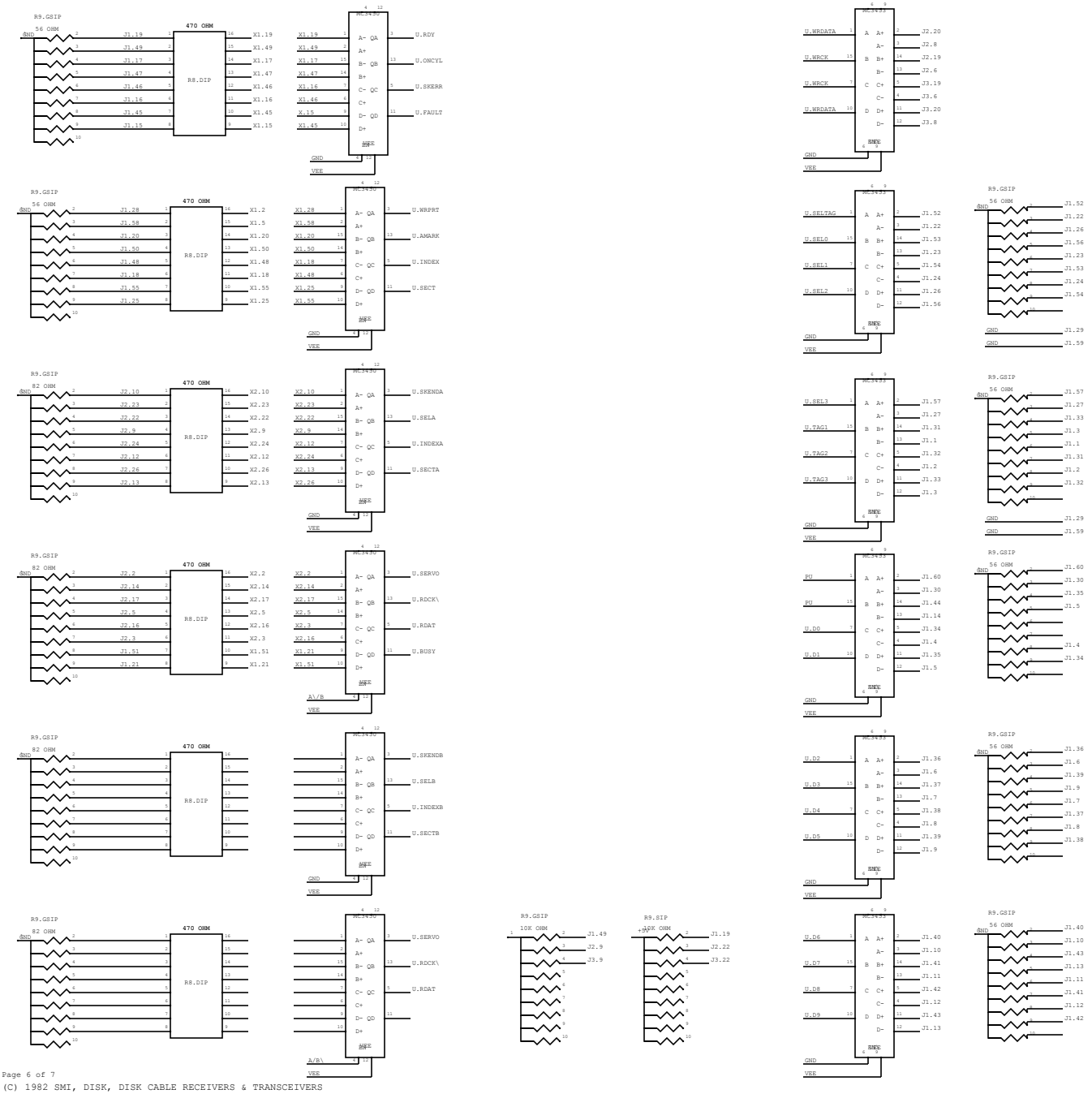

(C) 1982 SMI, DISK, DISK CABLE RECEIVERS & TRANSCEIVERS