Boost Converter:

COMPLETE

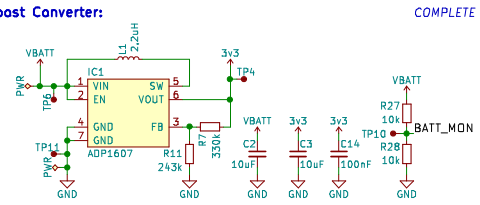

Input Voltage Range: 0.8v to Vout
Nominal Input Voltage: 1.3v to 1.5v
Nominal Output Current: **Max 300mA** @ Vout = 3.3v, Vin = 1.3v
Device Requirements: **3.3v @ 160mA**
Battery: Energizer L91 AA - Cap = 3500mAh, Vin = 1.3v Min
Vout = 1.259*(1+R1/R2) + 1uA*R1 = **3.2988v** w/ R1 = 330k R2 = 243k

GPS:

COMPLETE

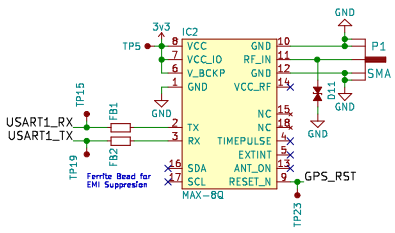

Pyro Channels:

COMPLETE

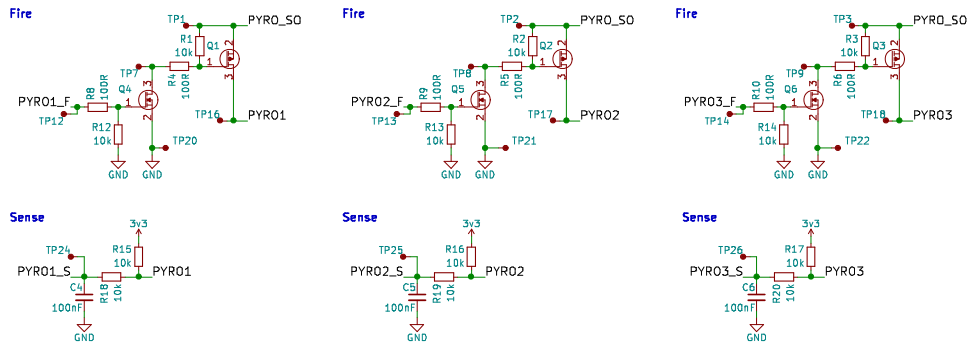

Pyro Channel 1 Pyro Channel 2 Pyro Channel 3

Flight Computer:

COMPLETE

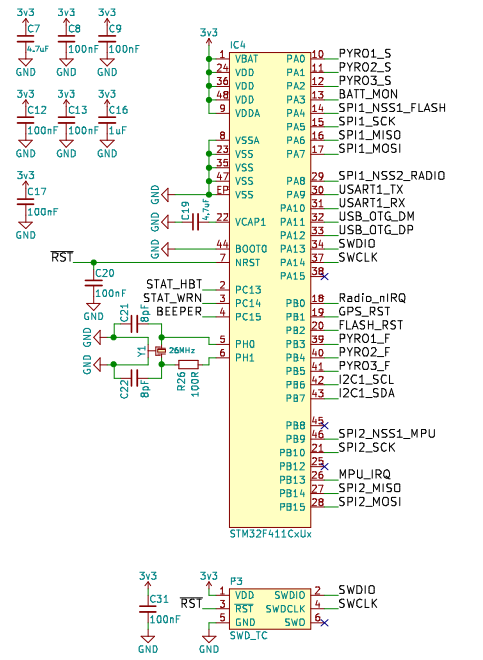

IMU:

COMPLETE

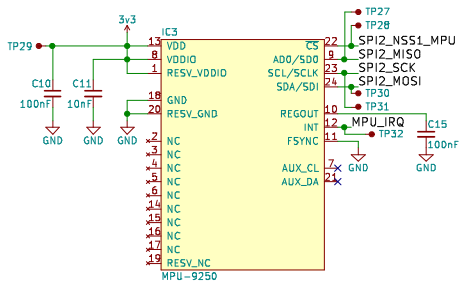

Radio:

COMPLETE

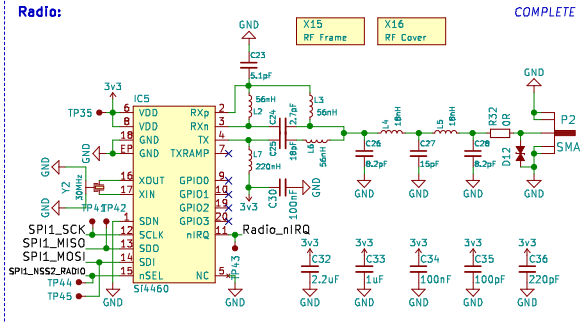

Alarm:

COMPLETE

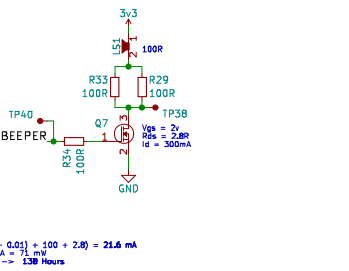

Id = 3.3v / (1/(0.01 + 0.01) + 100 + 2.8) = **21.6 mA**
Power = 3.3v * 21.6 mA = 71 mW
21.6 mA @ 3000 mAh -> **138 Hours**

External Connectors:

COMPLETE

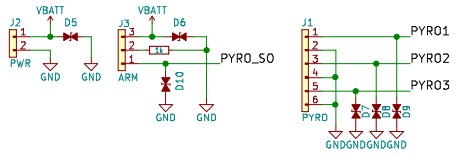

Status LEDs:

COMPLETE

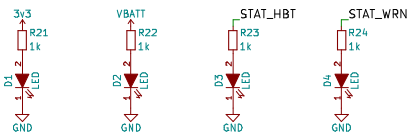

Datalogging:

COMPLETE

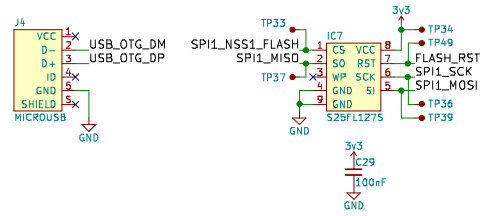

Barometer:

COMPLETE

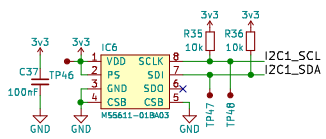

External Parts:

TODO: Select Wire, Heatshrink & Crimps

X1 434MHz ANT	X2 Red LED	X3 AA Battery	X4 AA Holder	X5 ARM Switch	X6 Wire	X7 Heat Shrink
X8 Housing x1	X9 Housing x4	X10 Housing x1	X11 Housing x3	X12 M Crimps x6	X13 F Crimps x17	X14 Crimp Tool

X1 434MHz Stubby Radio Antenna
X2 Red Indicator LED for Pyro Arming
X3 Energizer L91 Lithium Ultimate AA
X4 AA Battery Holder
X5 Key Switch for Arming Pyrotechnics
X6 Wire
X7 Heatshrink

X8 3 Pin Housing
X9 2 Pin Housing
X10 6 Pin Housing
X11 2 Pin Receptacle
X12 Male Crimps
X13 Femal Crimps
X14 Crimp Tool

Notes:

Camera will have its own power supply ect.

Red 3mm LED wired in parallel with keyswitch to provide pyro status.

External HBT & Status indication will be done through sounder & radio

Matthew Coates
Cambridge University Spaceflight

Sheet: /
File: Jarvis.sch

Title: Jarvis Flight Computer

Size: A3	Date: 2016-03-31	Rev: 1
KiCad E.D.A. kicad 4.0.2-4+622538ubuntu14.04.1-stable		Id: 1/1