Power Supply:

COMPLETE

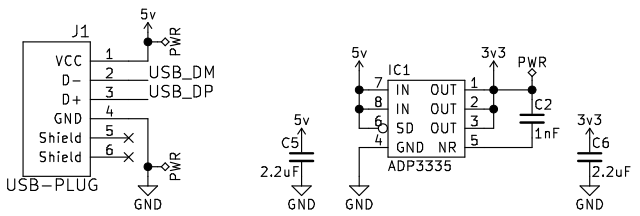

Radio:

COMPLETE

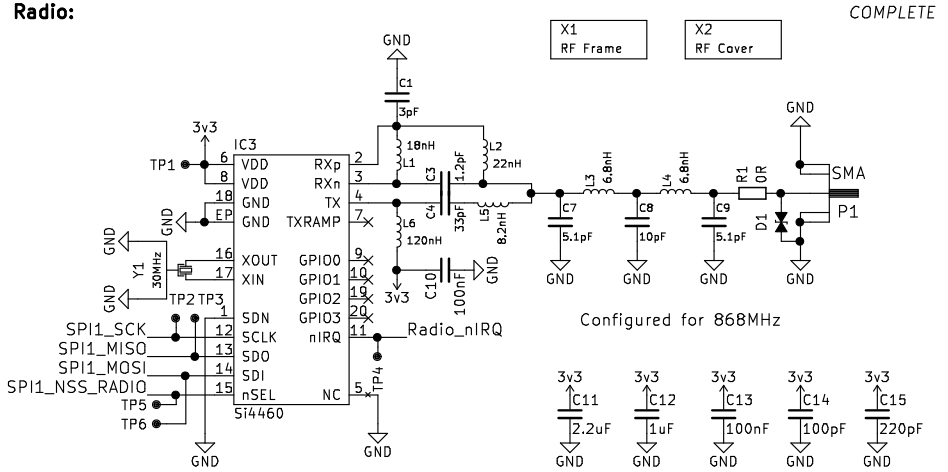

Processor:

COMPLETE

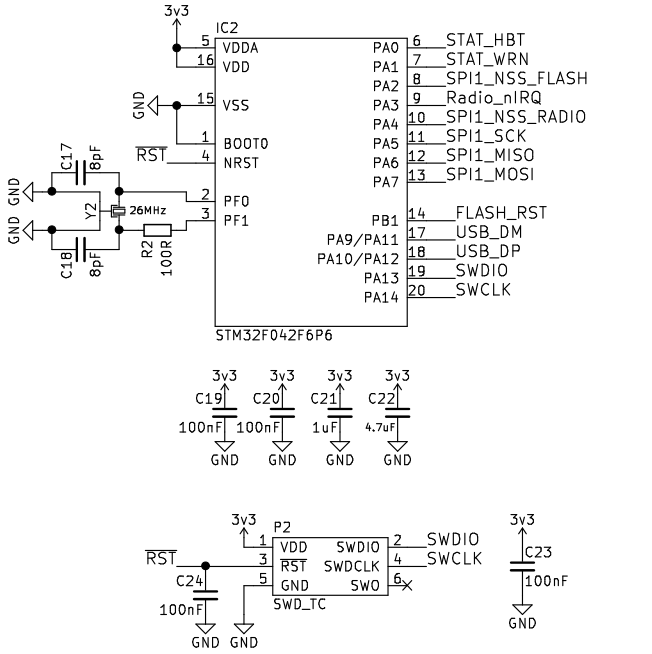

Flash:

COMPLETE

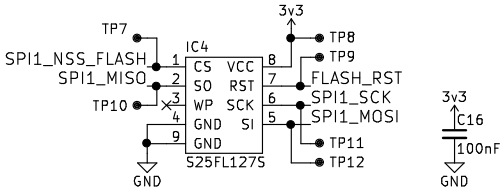

Status:

COMPLETE

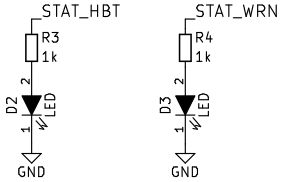

X3
Casing

Matthew Coates
Cambridge University Space Flight

Sheet: /
File: Ground Station.sch

Title: Radio Ground Station

Size: A4	Date: 2016-04-21	**Rev: 1**
KiCad E.D.A. kicad 4.0.2+e4-622538ubuntu14.04.1-stable		Id: 1/1