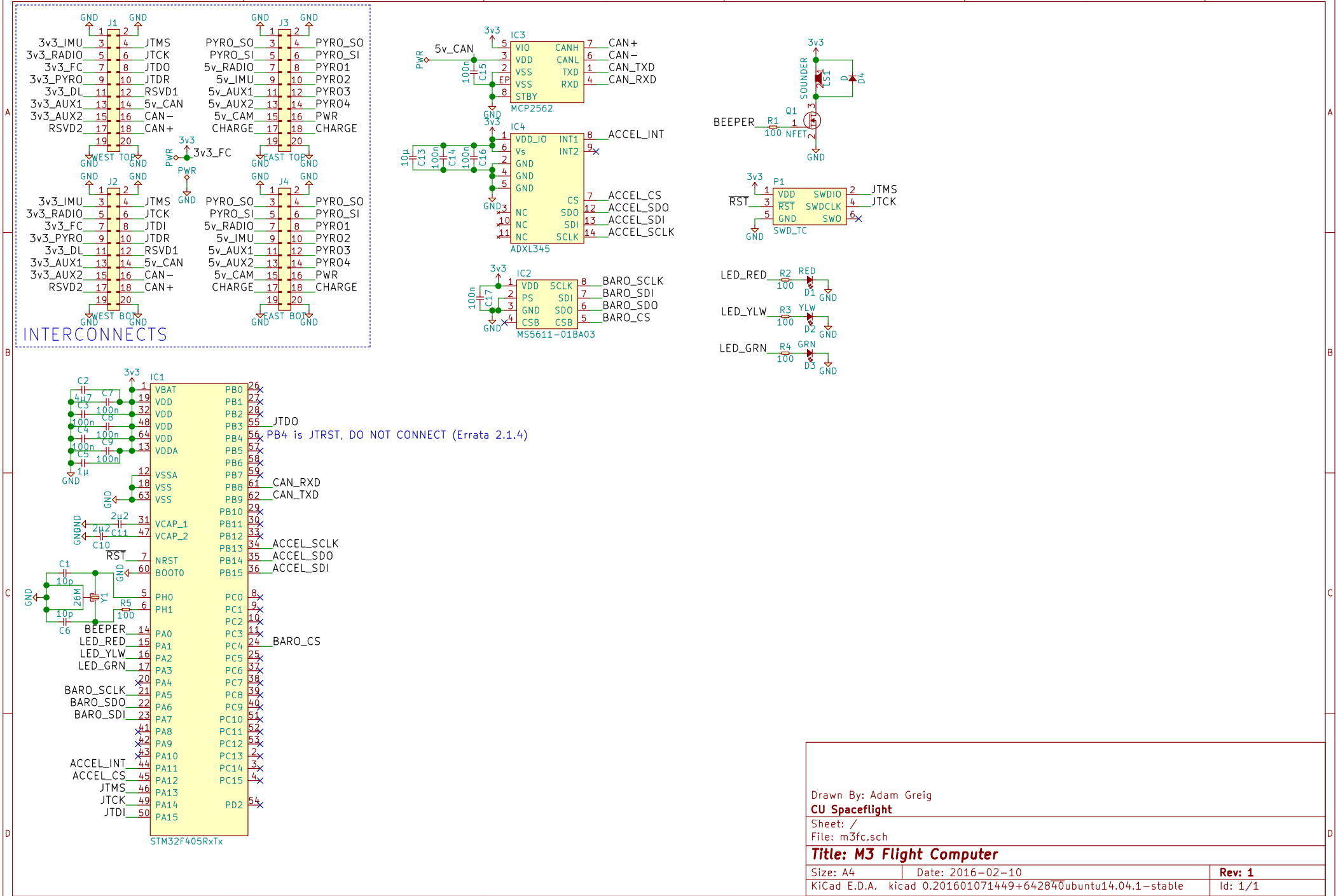
INTERCONNECTS
J1 WEST TOP
J2 WEST BOT
J3 EAST TOP
J4 EAST BOT
3v3_IMU
3v3_RADIO
3v3_FC
3v3_PYRO
3v3_DL
3v3_AUX1
3v3_AUX2
RSVD2
JTMS
JTCK
JTDO
JTDR
RSVD1
5v_CAN
CAN−
CAN+
JTDI
PYRO_SO
PYRO_SI
5v_RADIO
5v_IMU
5v_AUX1
5v_AUX2
5v_CAM
CHARGE
PYRO1
PYRO2
PYRO3
PYRO4
PWR
3v3_FC
IC3 MCP2562
5v_CAN
CAN+
CAN−
CAN_TXD
CAN_RXD
IC4 ADXL345
ACCEL_INT
ACCEL_CS
ACCEL_SDO
ACCEL_SDI
ACCEL_SCLK
IC2 MS5611−01BA03
BARO_SCLK
BARO_SDI
BARO_SDO
BARO_CS
SOUNDER
LS1
D4
BEEPER
R1 100
Q1 NFET
P1 SWD_TC
JTMS
JTCK
LED_RED
R2 100
D1 RED
LED_YLW
R3 100
D2 YLW
LED_GRN
R4 100
D3 GRN
IC1 STM32F405RxTx
JTDO
PB4 is JTRST, DO NOT CONNECT (Errata 2.1.4)
CAN_RXD
CAN_TXD
ACCEL_SCLK
ACCEL_SDO
ACCEL_SDI
BARO_CS
BEEPER
LED_RED
LED_YLW
LED_GRN
BARO_SCLK
BARO_SDO
BARO_SDI
ACCEL_INT
ACCEL_CS
JTMS
JTCK
JTDI
Y1 26M
R5 100
Drawn By: Adam Greig
CU Spaceflight
Sheet: /
File: m3fc.sch
Title: M3 Flight Computer
Size: A4
Date: 2016−02−10
Rev: 1
KiCad E.D.A. kicad 0.201601071449+642840ubuntu14.04.1−stable
Id: 1/1