Primary Radio:

Complete

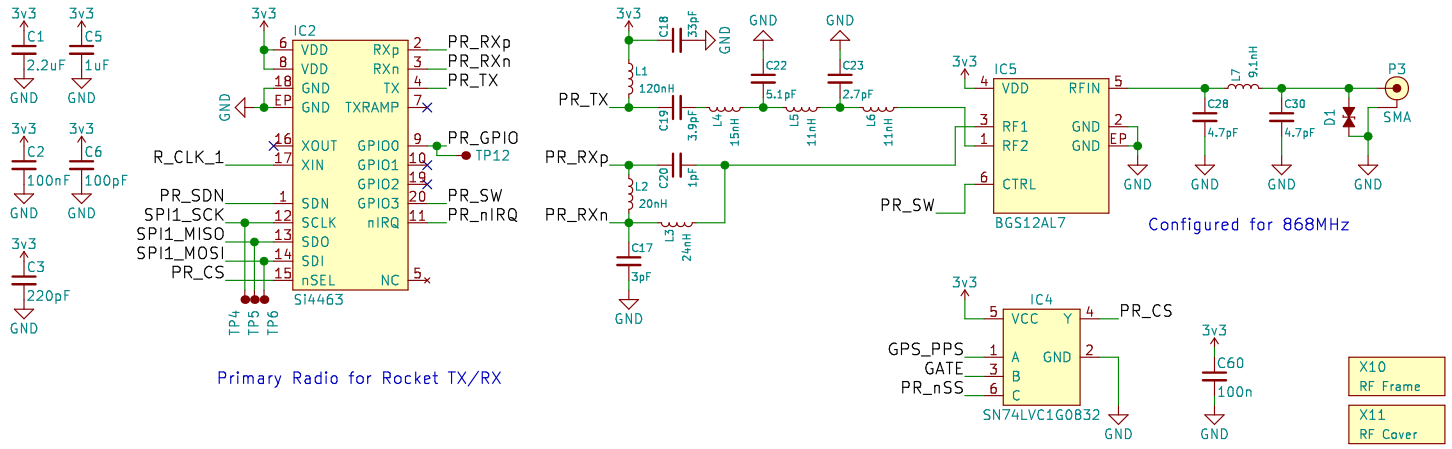

Secondary Radio:

Complete

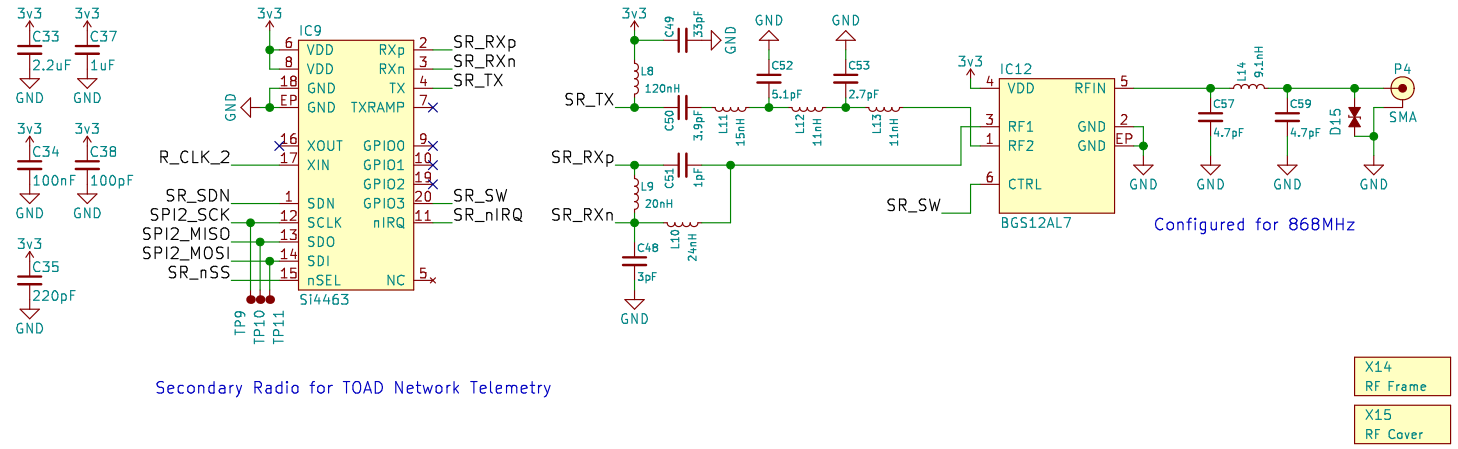

Microcontroller:

Complete

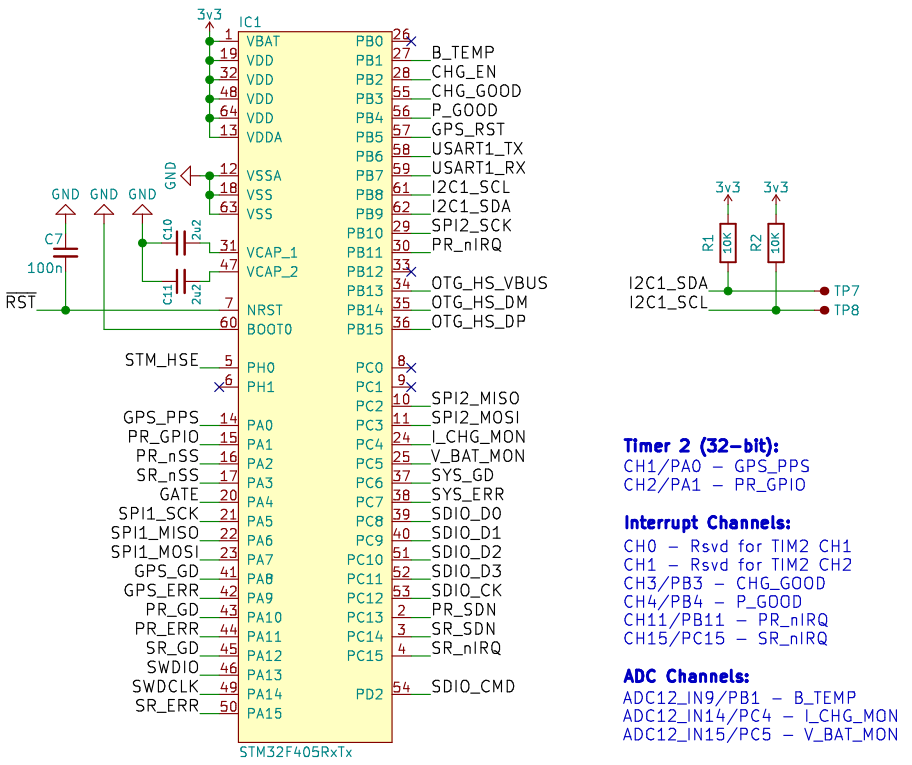

SD Card:

Complete

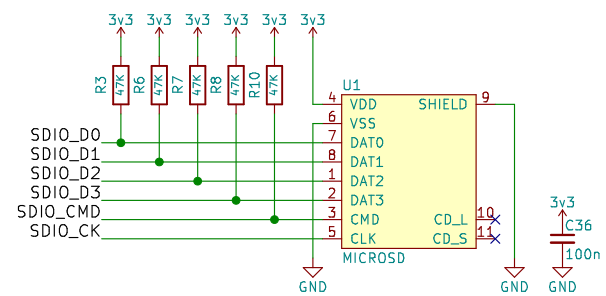

External Connectors:

Complete

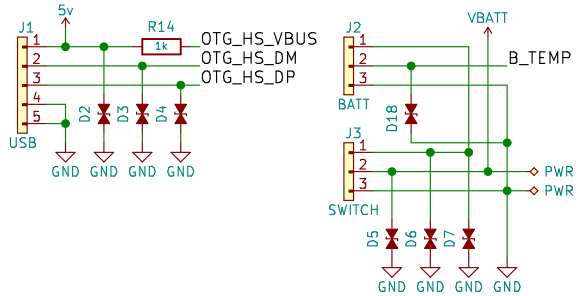

Status Indication:

Complete

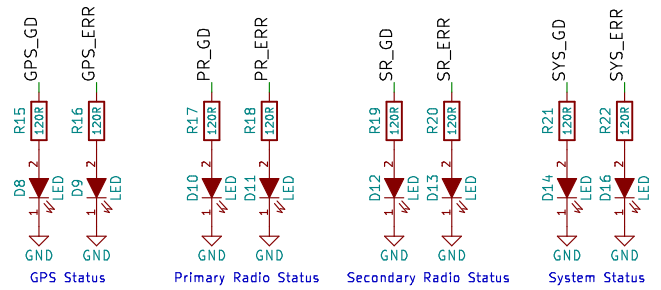

Clock Recovery:

Complete

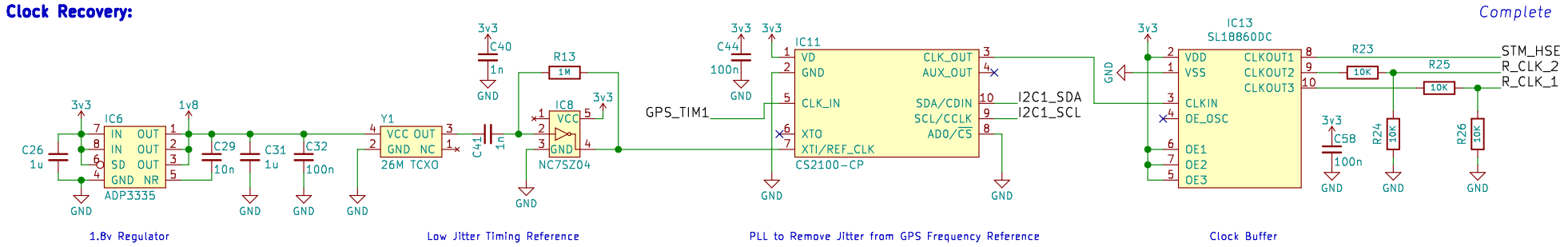

Power Supply:

Complete

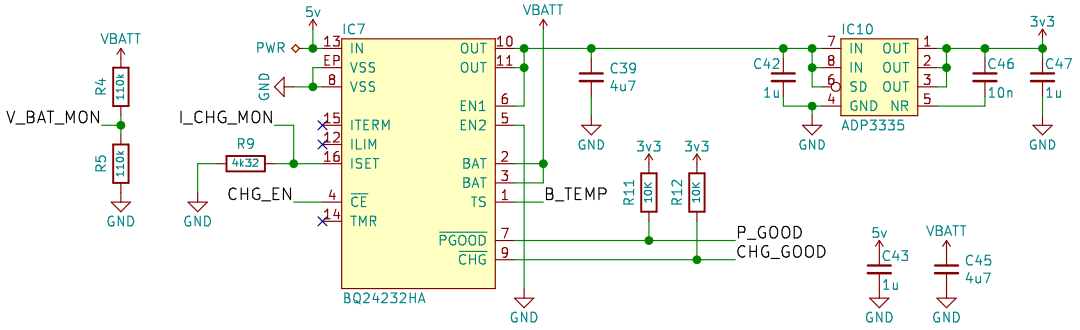

GPS:

Complete

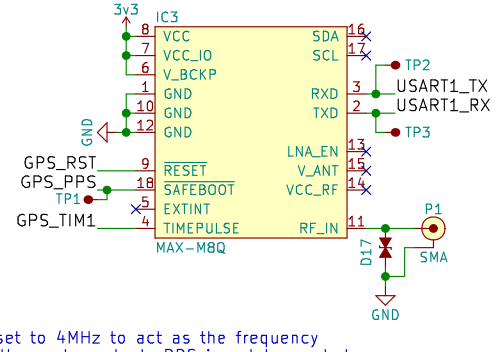

Timepulse is set to 4MHz to act as the frequency reference for the system clock. PPS is set to produde 1 pulse per second in falling mode.

External Parts:

X1 USB Cap	X4 SMA Panel	X6 PWR Switch	X8 Mount	X12 Mount
X2 USB Mini-B	X5 SMA Panel	X7 Battery	X9 Mount	X13 Mount
X3 Case				

Matthew Coates
Cambridge University Spaceflight

Sheet: /
File: TOAD.sch

See ../documentation/RangingSpecs.pdf for further notes

Title: TOAD

Size: A3	Date: 2017-01-09	Rev: 1
KiCad E.D.A. kicad no-vcs-found-2237de058ubuntu16.04.1		Id: 1/1