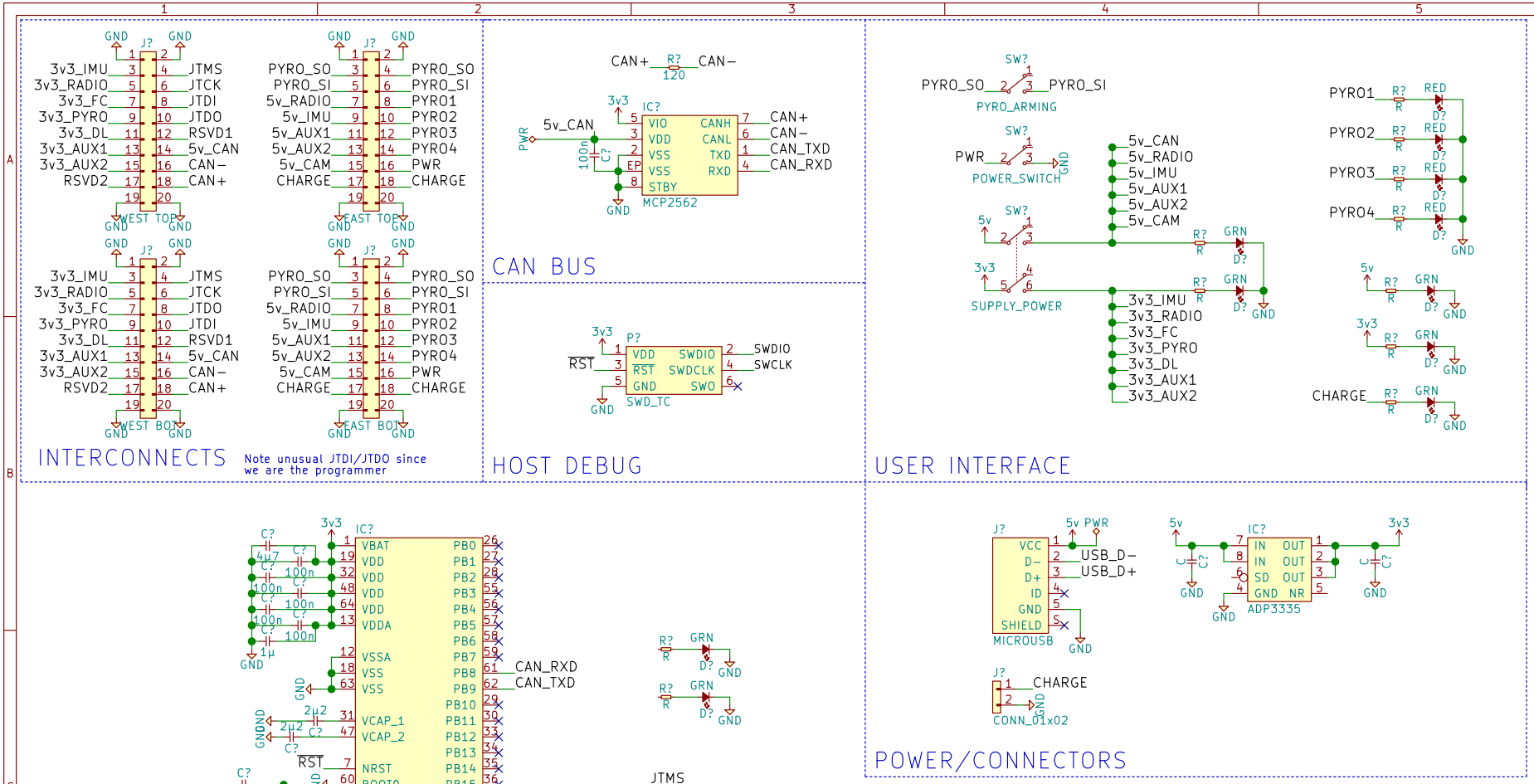

Drawn By: Adam Greig
CU Spaceflight
Sheet: /
File: m3debug.sch

Title: M3 Debug

Size: A4	Date: 2016-02-10	**Rev: 1**
KiCad E.D.A. kicad 0.201601071449+642840ubuntu14.04.1-stable		Id: 1/1