Primary Radio:

Complete

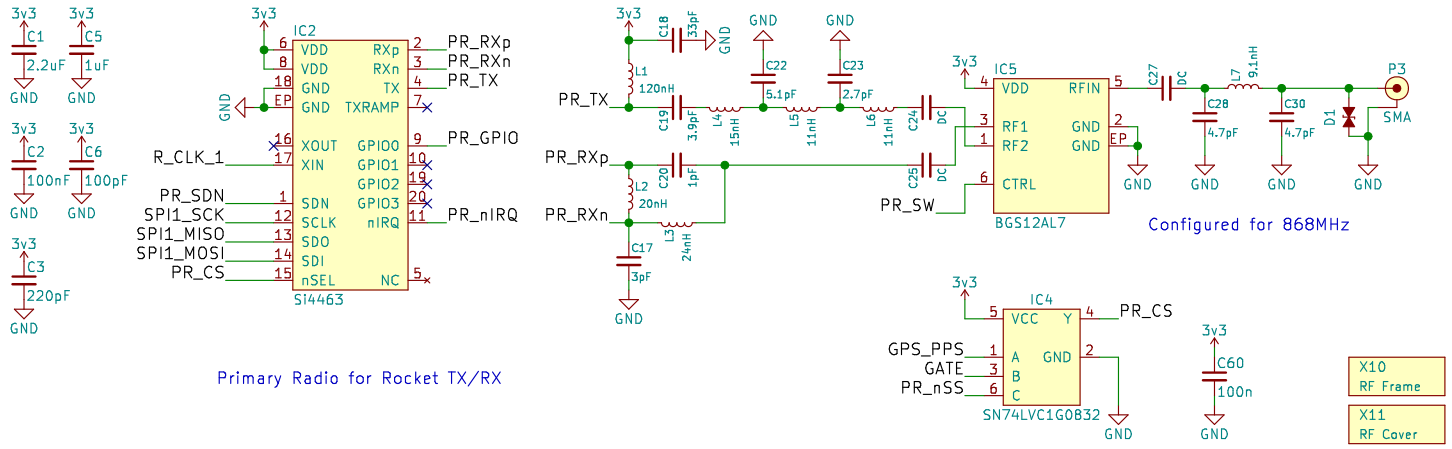

Configured for 868MHz

Primary Radio for Rocket TX/RX

Secondary Radio:

Complete

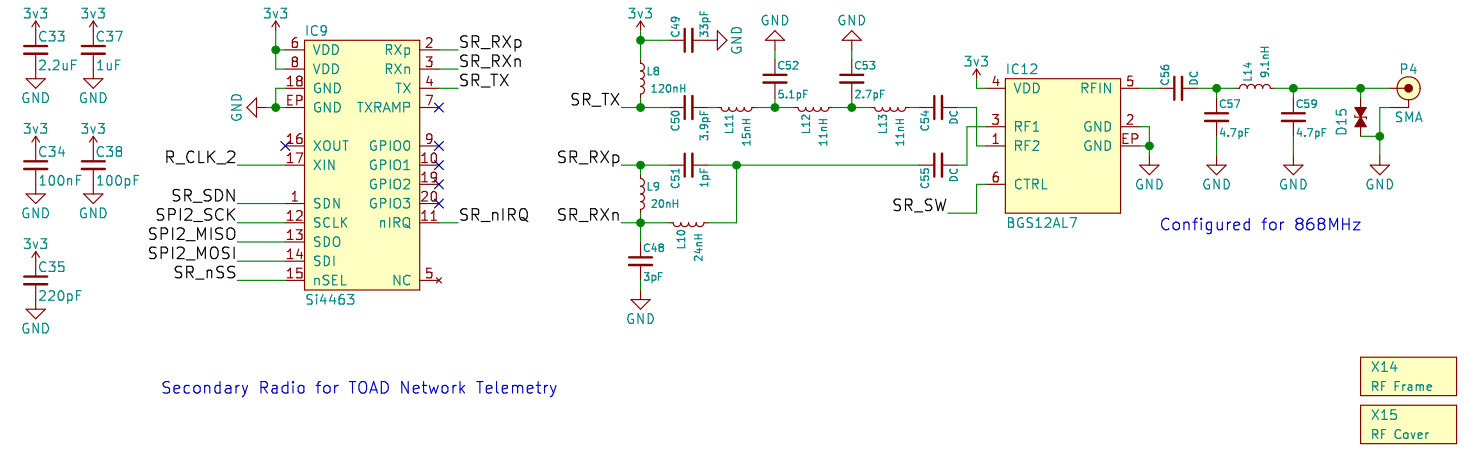

Configured for 868MHz

Secondary Radio for TOAD Network Telemetry

Microcontroller:

Complete

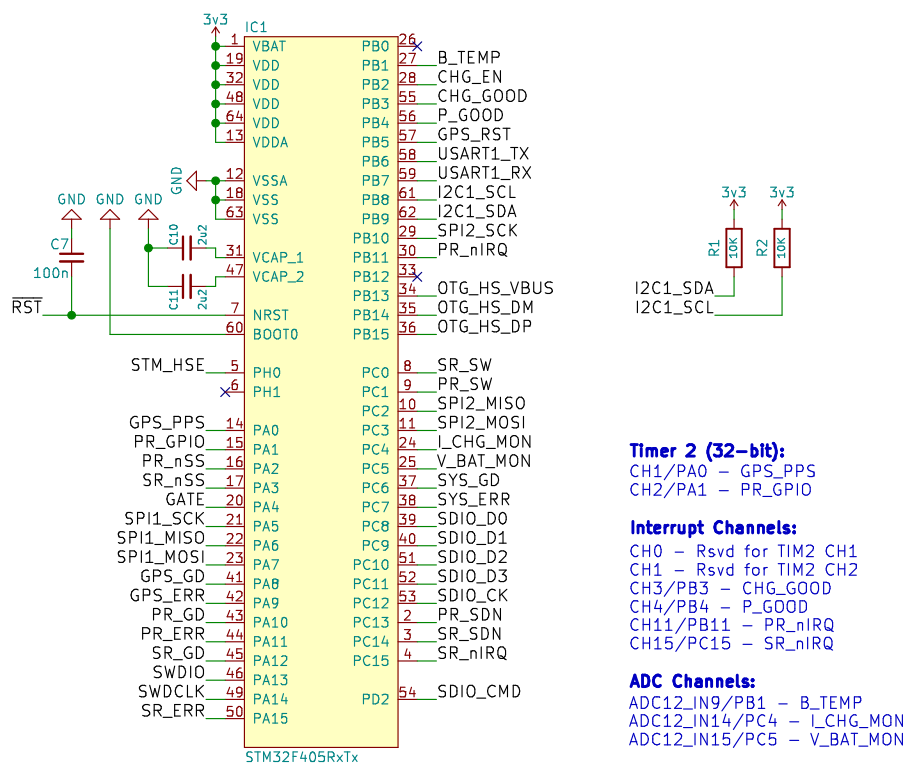

Timer 2 (32-bit):
CH1/PA0 – GPS_PPS
CH2/PA1 – PR_GPIO

Interrupt Channels:
CH0 – Rsvd for TIM2 CH1
CH1 – Rsvd for TIM2 CH2
CH3/PB3 – CHG_GOOD
CH4/PB4 – P_GOOD
CH11/PB11 – PR_nIRQ
CH15/PC15 – SR_nIRQ

ADC Channels:
ADC12_IN9/PB1 – B_TEMP
ADC12_IN14/PC4 – I_CHG_MON
ADC12_IN15/PC5 – V_BAT_MON

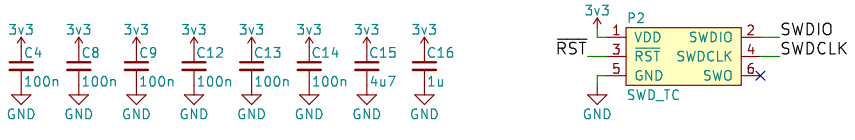

SD Card:

Complete

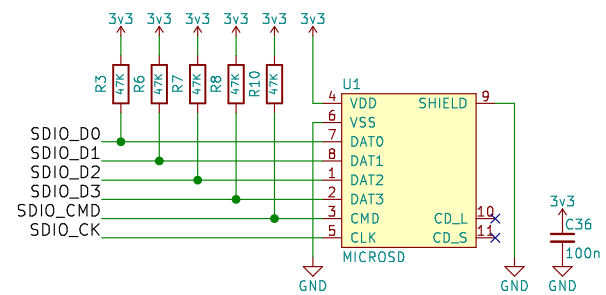

External Connectors:

Complete

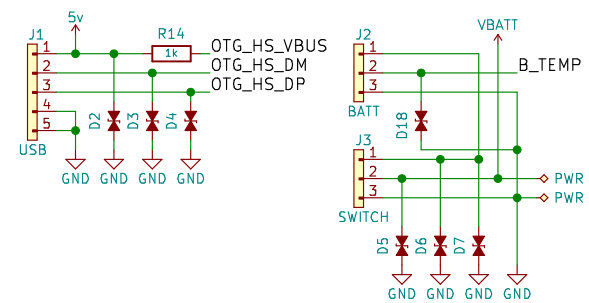

Status Indication:

Complete

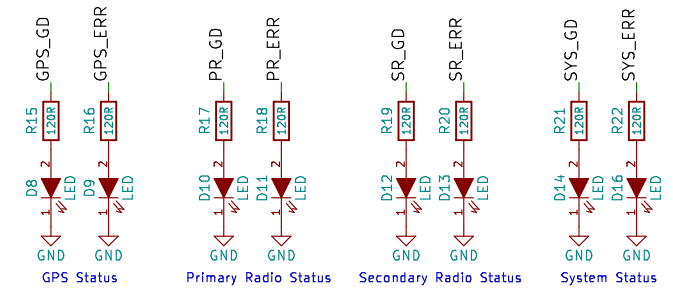

Clock Recovery:

Complete

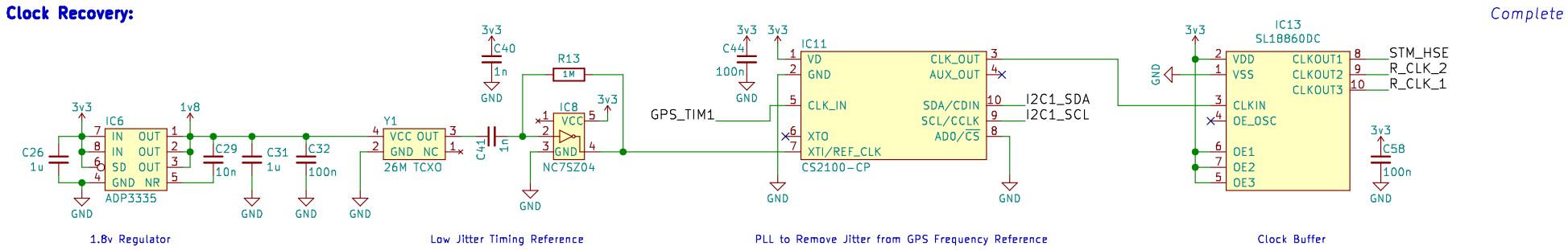

1.8v Regulator

Low Jitter Timing Reference

PLL to Remove Jitter from GPS Frequency Reference

Clock Buffer

Power Supply:

Complete

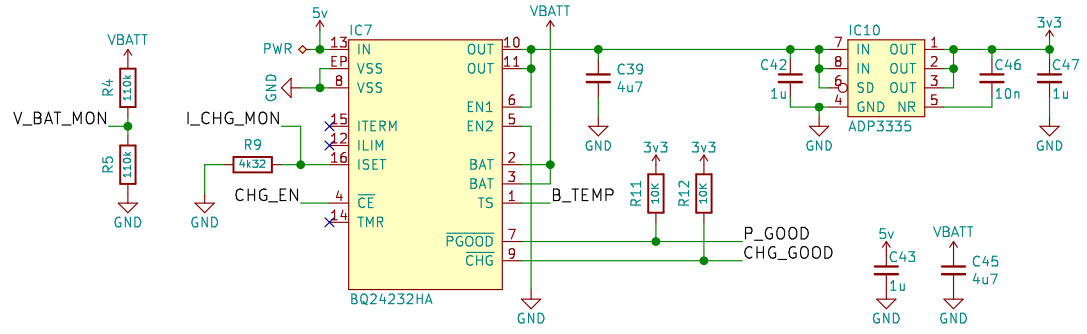

GPS:

Complete

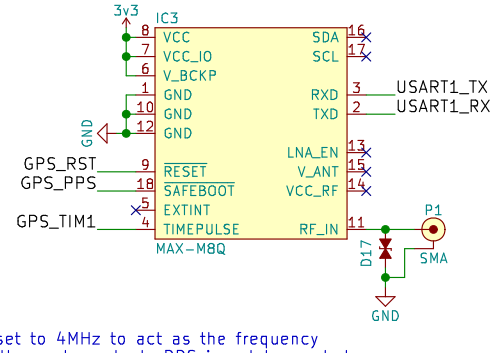

Timepulse is set to 4MHz to act as the frequency reference for the system clock. PPS is set to produde 1 pulse per second in falling mode.

External Parts:

X1 USB Cap	X4 SMA Panel	X6 PWR Switch	X8 Mount	X12 Mount
X2 USB Mini-B	X5 SMA Panel	X7 Battery	X9 Mount	X13 Mount
X3 Case				

TODO:
- Add debug points
- Begin PCB layout of each section
- Place holes and board edge
- Complete PCB layout

Matthew Coates
Cambridge University Spaceflight

Sheet: /
File: TOAD.sch

See /RangingSpecs.pdf for further notes

Title: TOAD

Size: A3	Date: 2017-01-09	Rev: 1
KiCad E.D.A. kicad no-vcs-found-feba09158ubuntu16.04.1		Id: 1/1