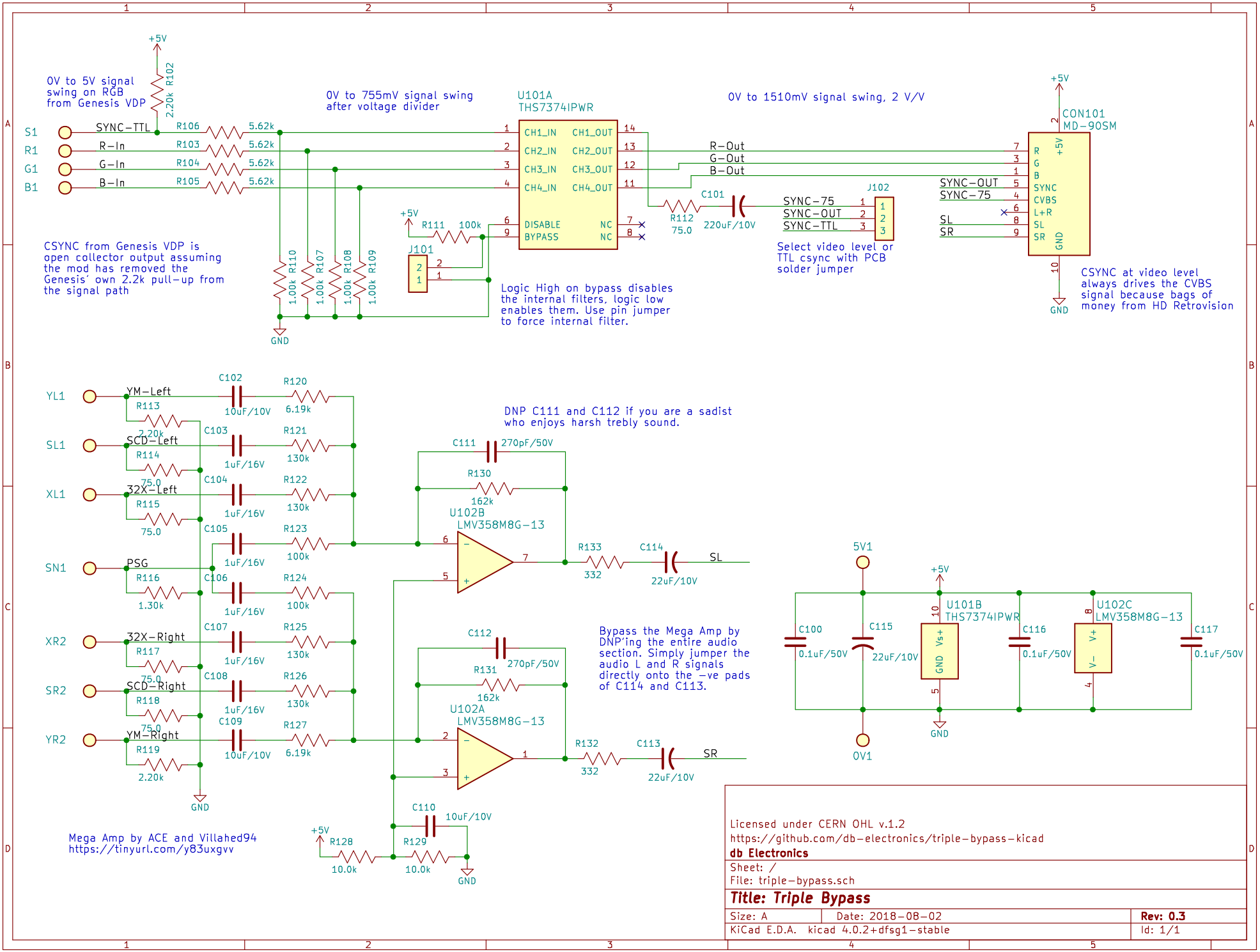

Licensed under CERN OHL v.1.2
https://github.com/db-electronics/triple-bypass-kicad
db Electronics

Sheet: /
File: triple-bypass.sch

Title: Triple Bypass

Size: A	Date: 2018-08-02	**Rev: 0.3**
KiCad E.D.A. kicad 4.0.2+dfsg1-stable		Id: 1/1