带可调末端增益的SPO2放大电路

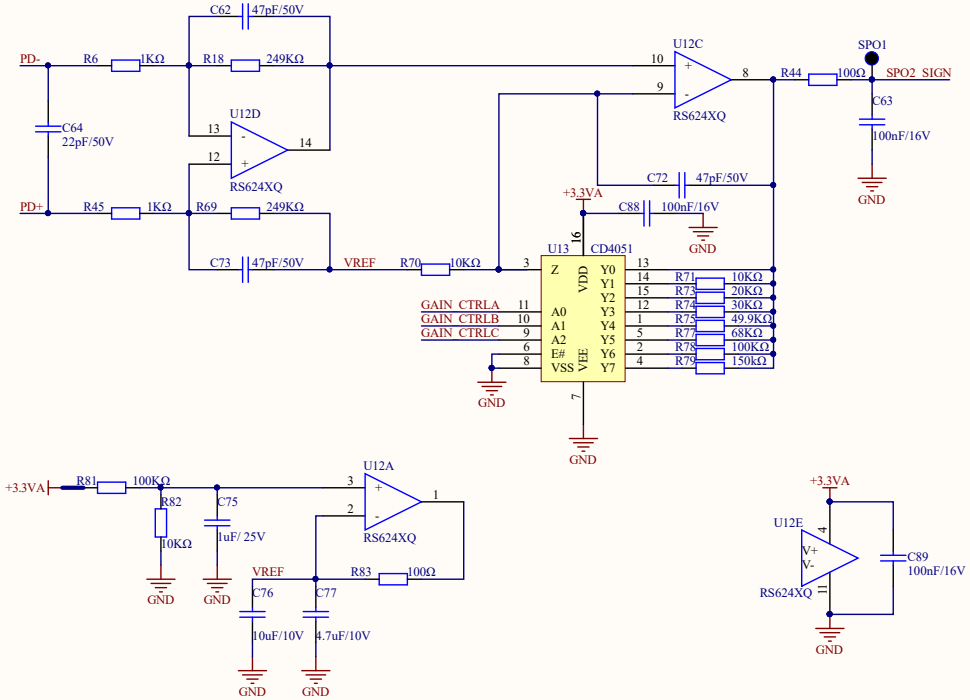

GD32F310电路

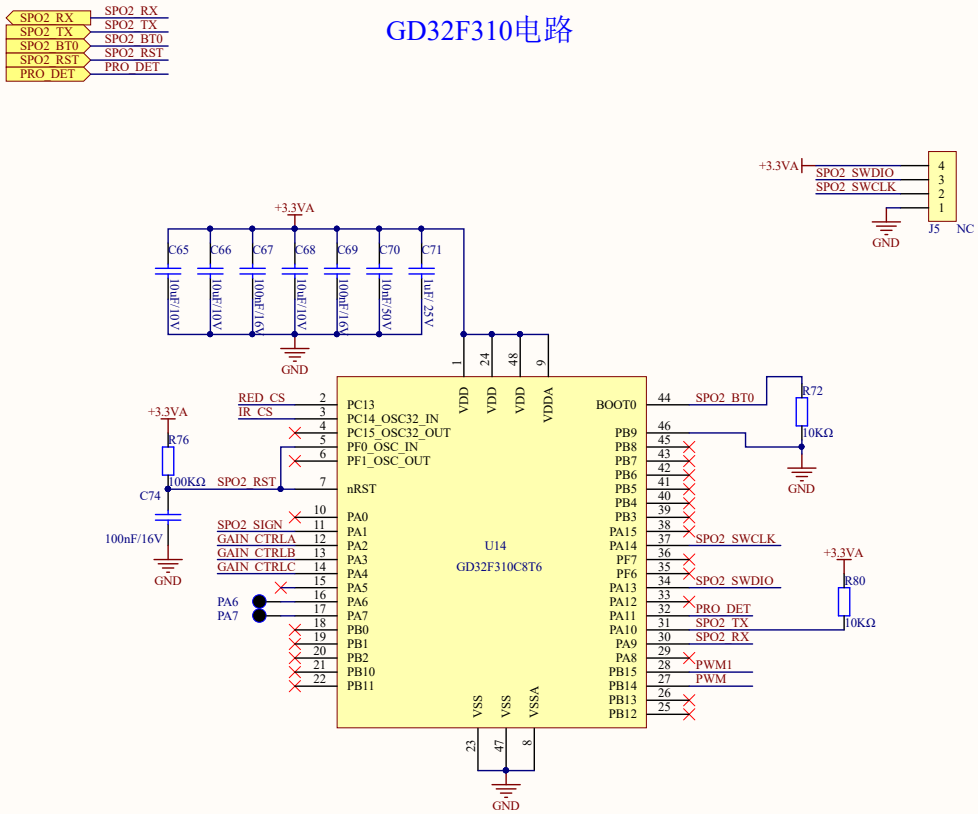

SPO2发光管驱动

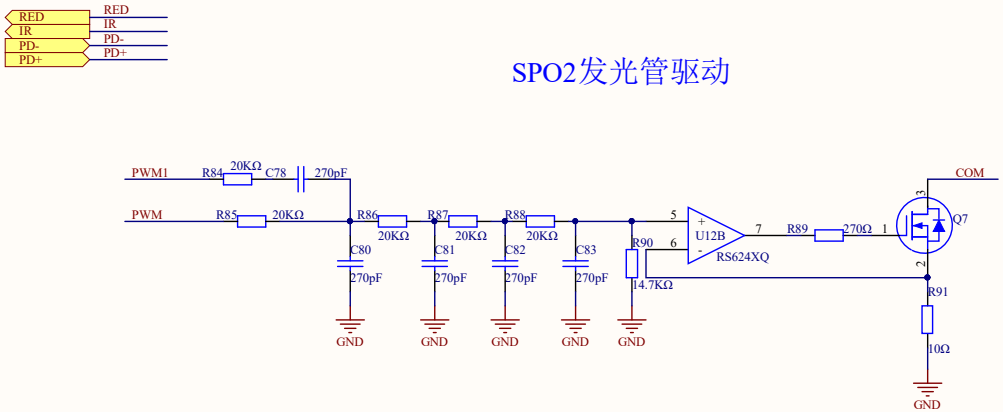

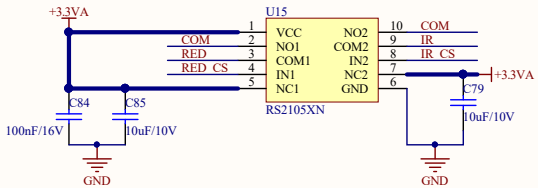

DocumentName: 04.Spo2.SchDoc	
Revision:	Size: A3
SheetNumber:	SheetTotal:
Author:	Date: 2023/9/7

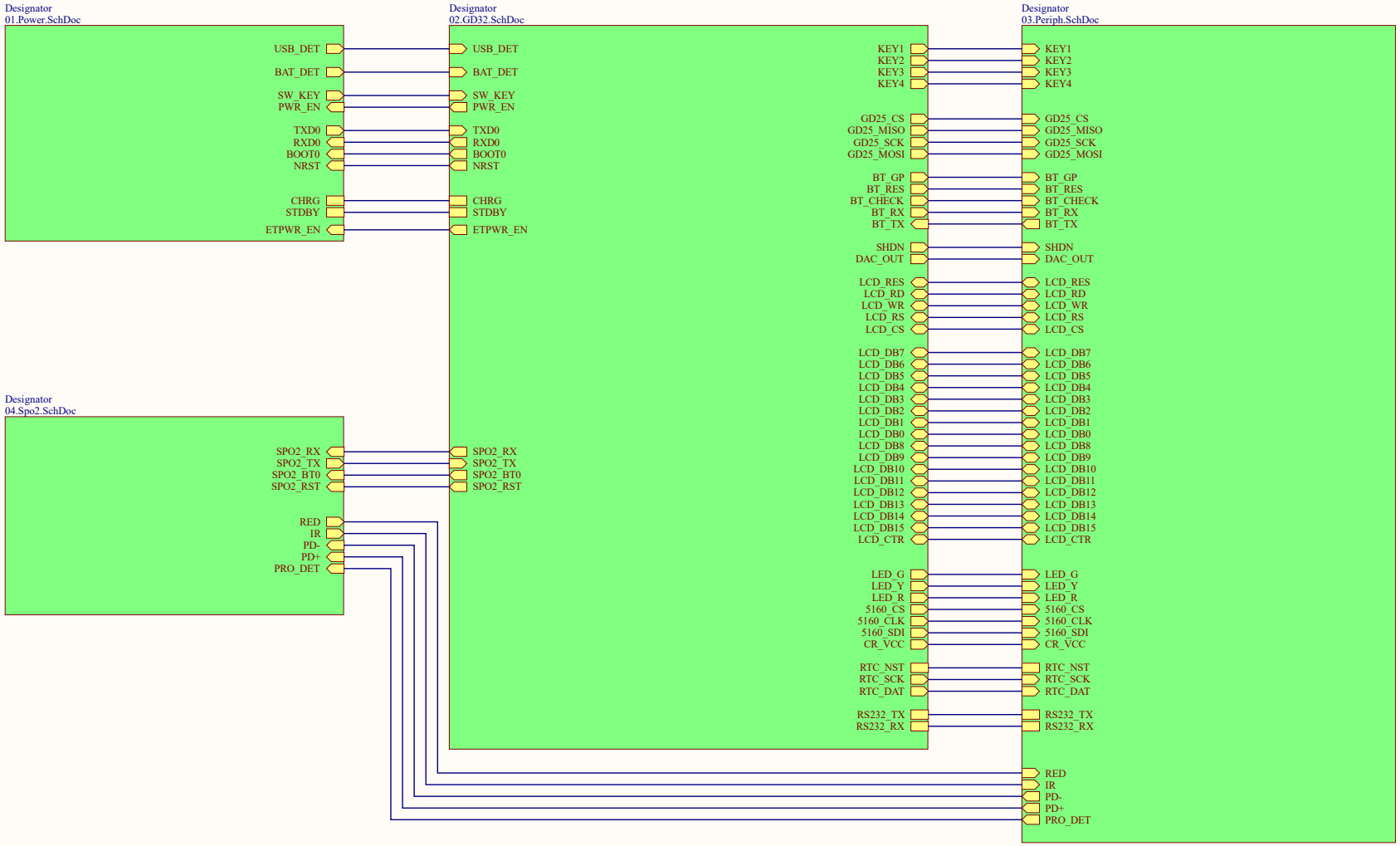

DocumentName: 00.Top.SchDoc	
Revision: V1.0.0	Size: A3
SheetNumber: 0	SheetTotal: 4
Author: WRH	Date: 2022/11/21

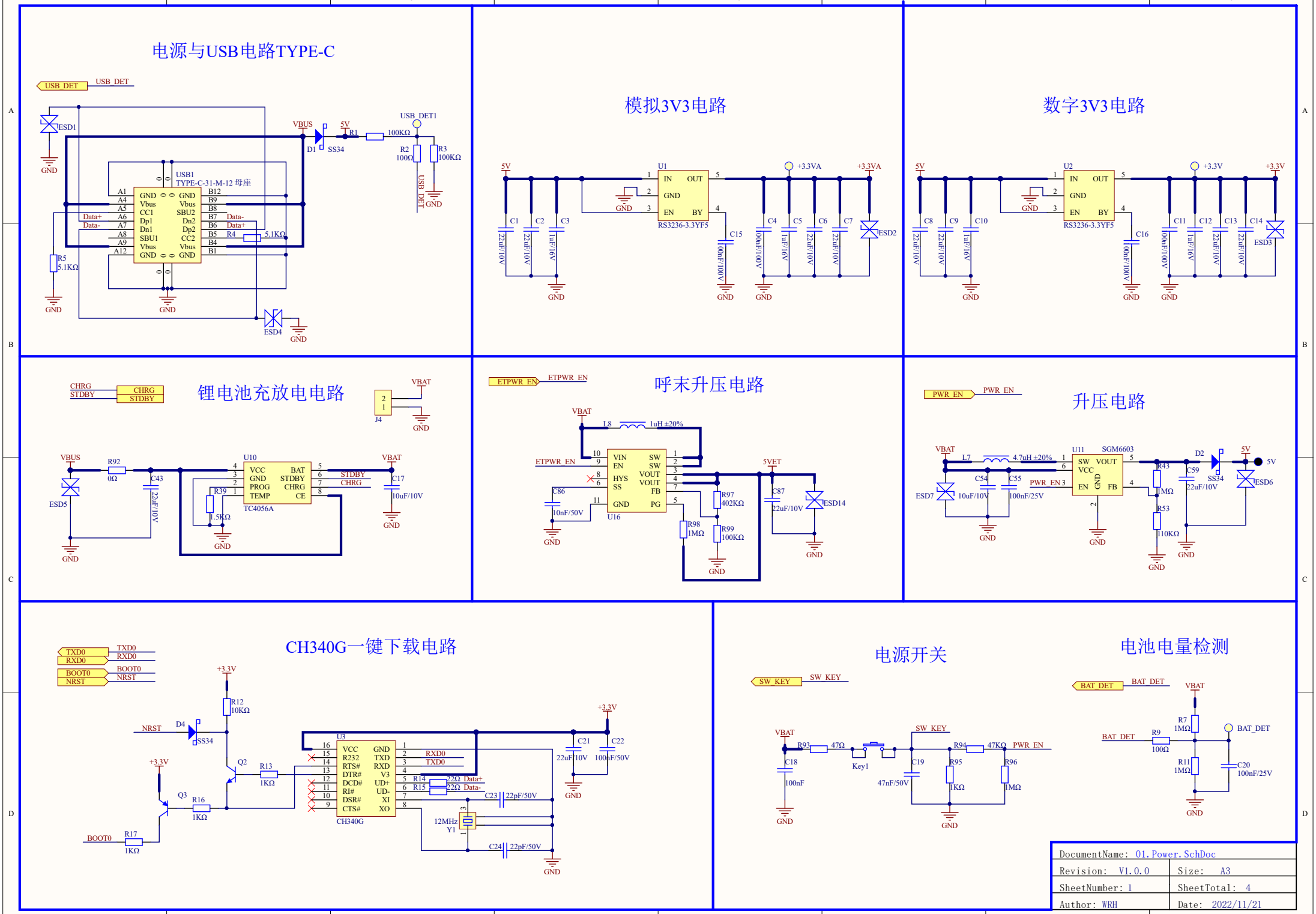

DocumentName: 01.Power.SchDoc	
Revision: V1.0.0	Size: A3
SheetNumber: 1	SheetTotal: 4
Author: WRH	Date: 2022/11/21

GD32微控制器电路

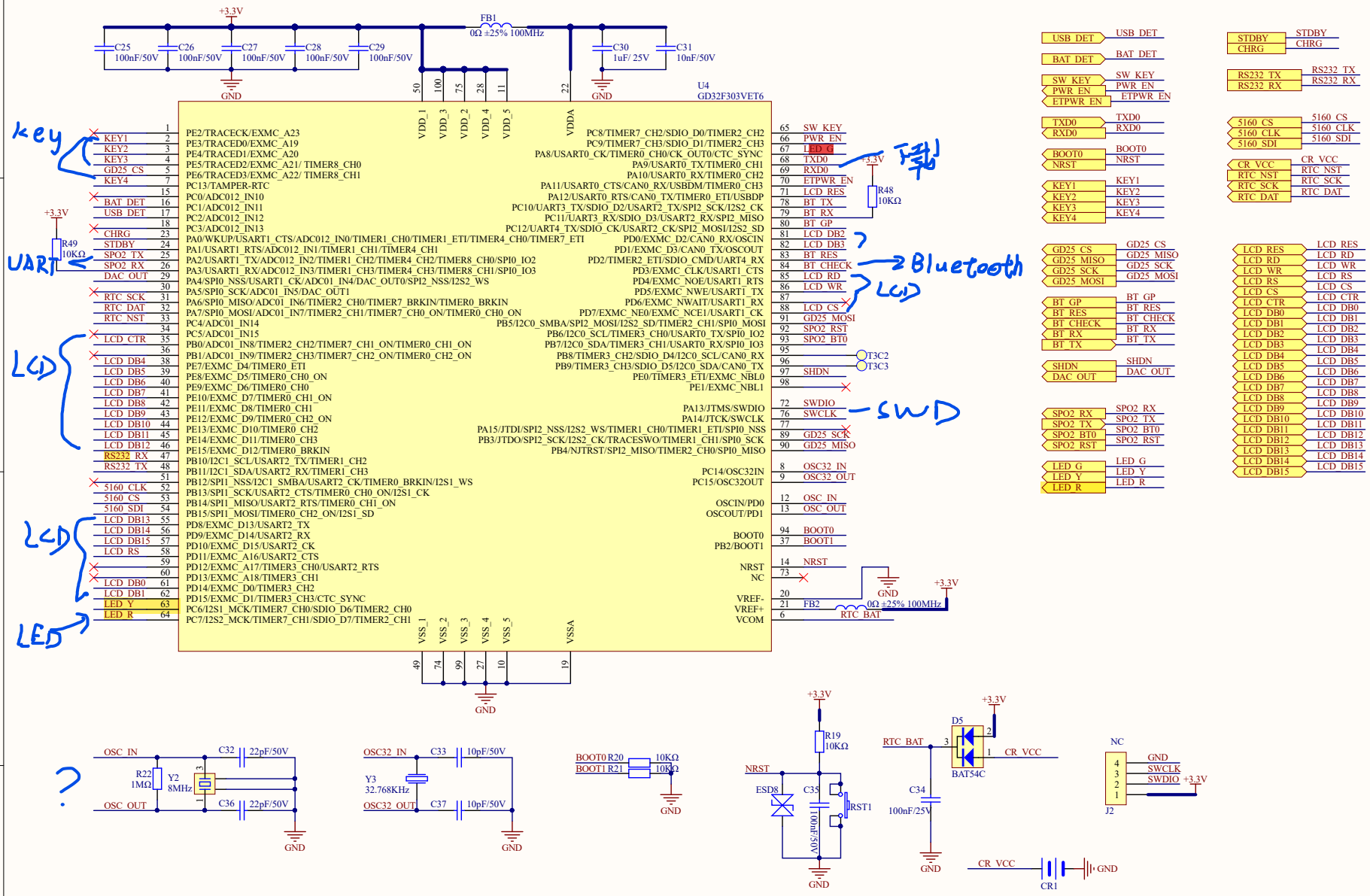

DocumentName: 02.GD32.SchDoc	
Revision: V1.0.0	Size: A3
SheetNumber: 2	SheetTotal: 4
Author: WRH	Date: 2022/11/21

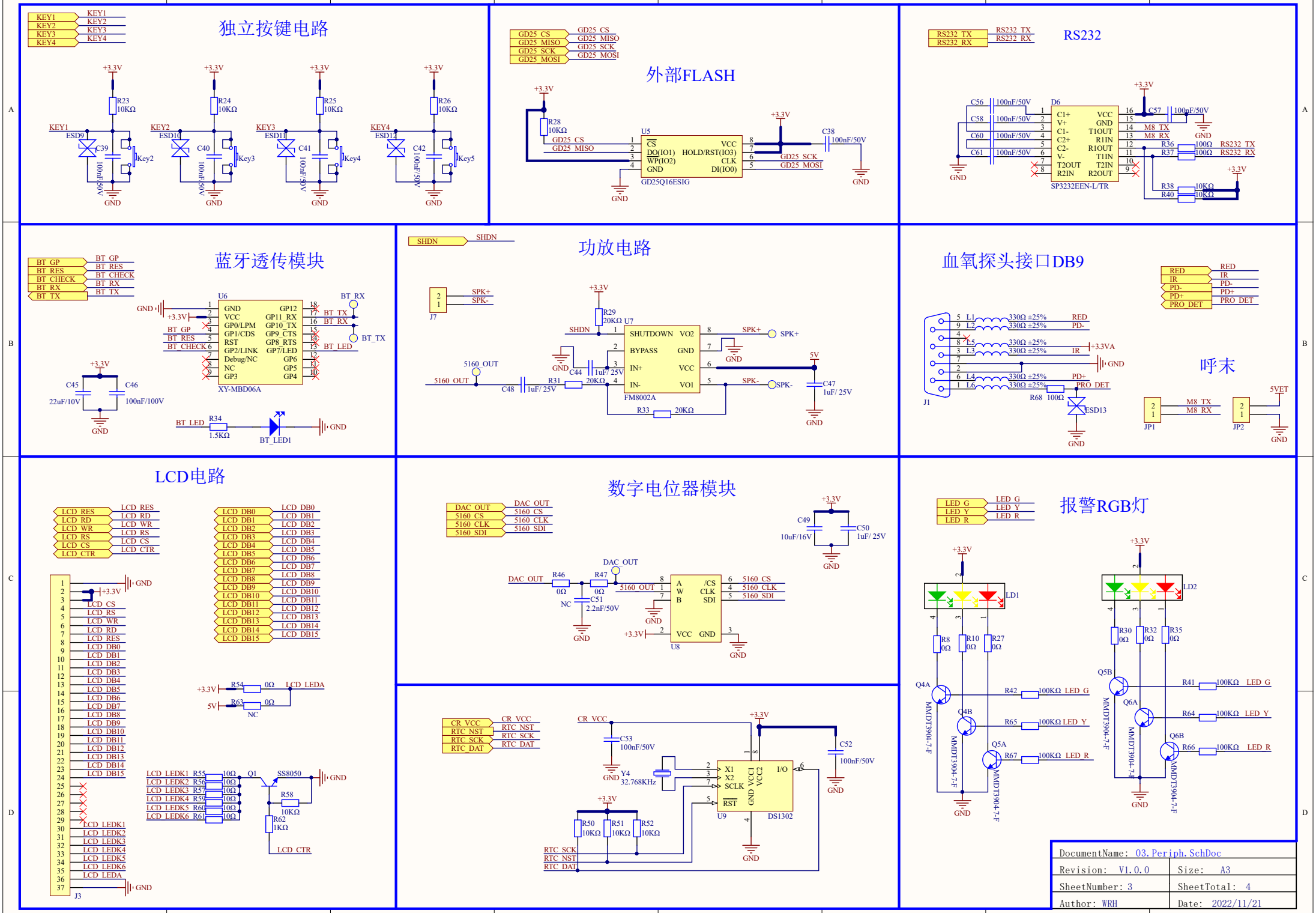
独立按键电路
外部FLASH
RS232
蓝牙透传模块
功放电路
血氧探头接口DB9
呼末
LCD电路
数字电位器模块
报警RGB灯
GD25Q16ESIG
SP3232EEN-L/TR
XY-MBD06A
FM8002A
DS1302
DocumentName: 03.Periph.SchDoc
Revision: V1.0.0
Size: A3
SheetNumber: 3
SheetTotal: 4
Author: WRH
Date: 2022/11/21