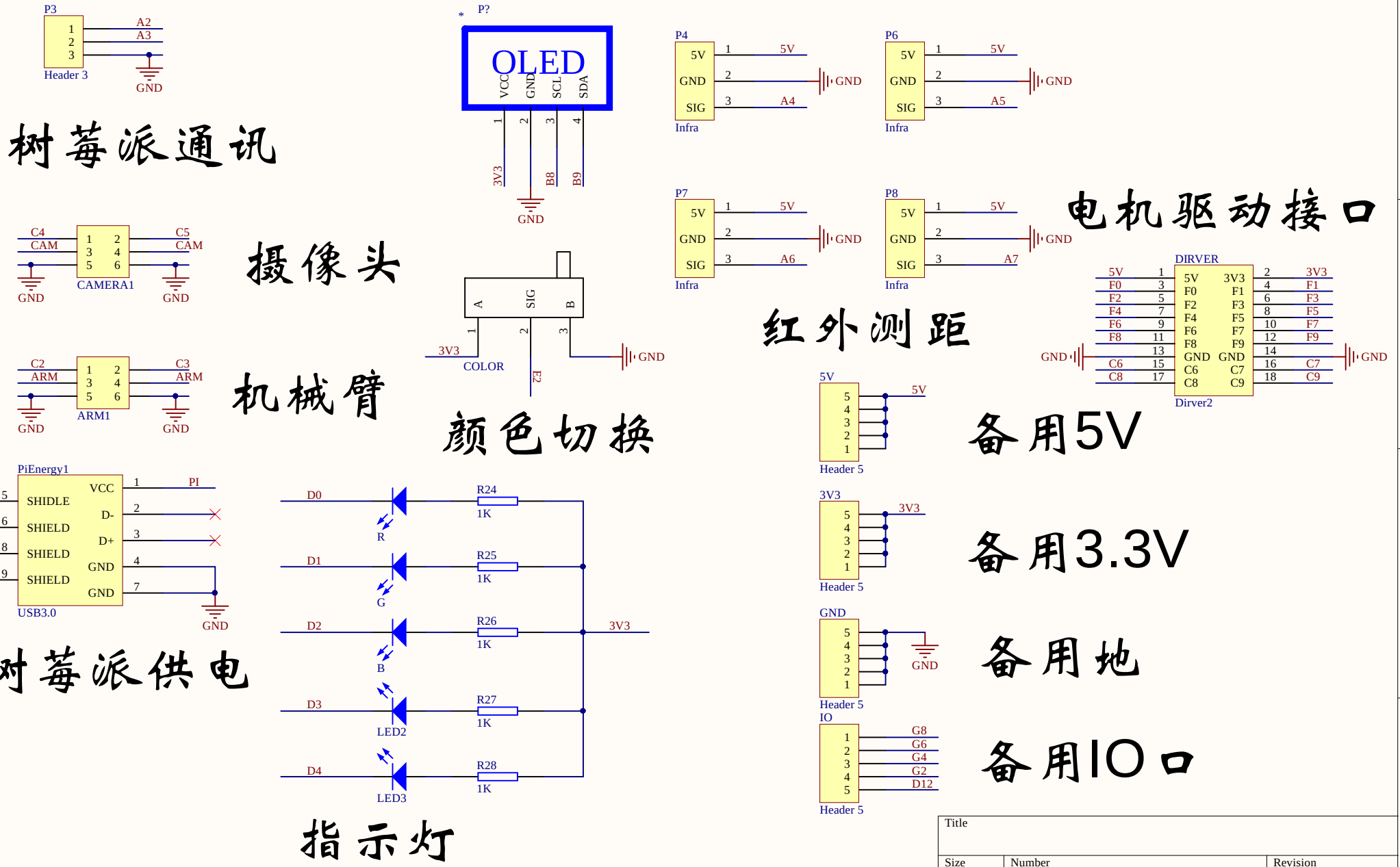
P3
Header 3
A2
A3
GND
树莓派通讯
P?
OLED
VCC
GND
SCL
SDA
3V3
B8
B9
GND
P4
5V
GND
SIG
Infra
A4
P6
A5
P7
A6
P8
A7
电机驱动接口
DIRVER
Dirver2
C4
CAM
C5
CAMERA1
摄像头
C2
ARM
C3
ARM1
机械臂
A
SIG
B
COLOR
F2
颜色切换
PiEnergy1
SHIDLE
SHIELD
VCC
D-
D+
GND
PI
USB3.0
树莓派供电
D0
D1
D2
D3
D4
R
G
B
LED2
LED3
R24
R25
R26
R27
R28
1K
3V3
5V
备用5V
备用3.3V
备用地
IO
G8
G6
G4
G2
D12
备用IO口
Title
Size
A4
Number
Revision
Date:
2019/11/9星期六
Sheet
of
File:
E:\我的电路板\投篮机器人2.0\Device.SchDoc
Drawn By:

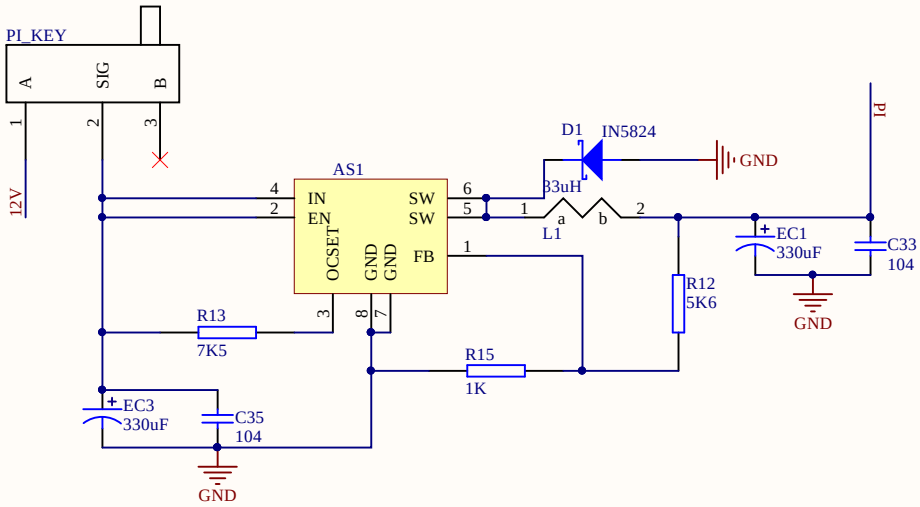

树莓派5V电源

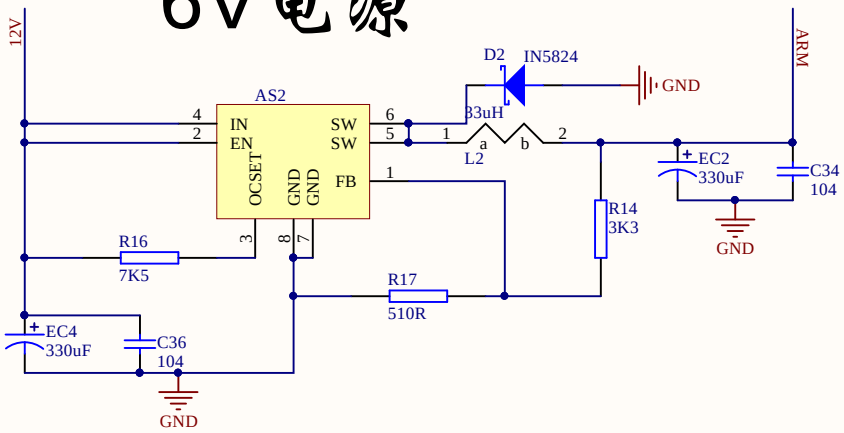

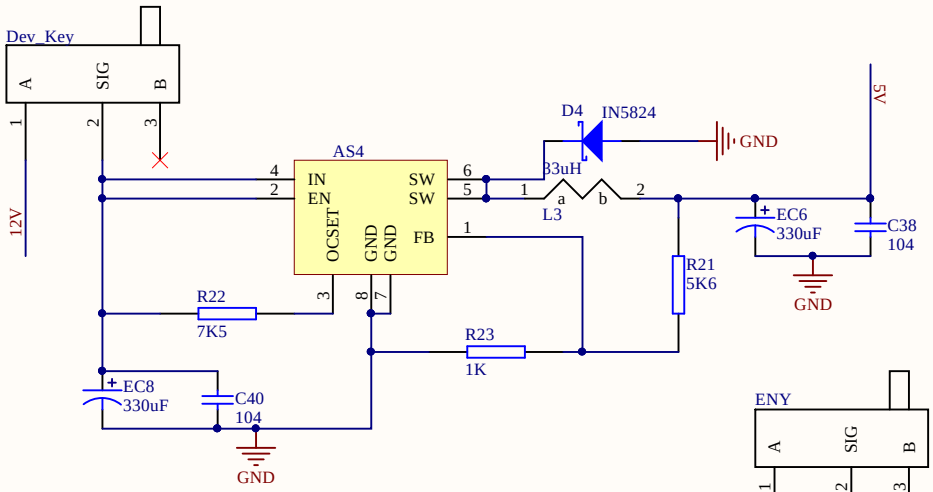

设备5V电源

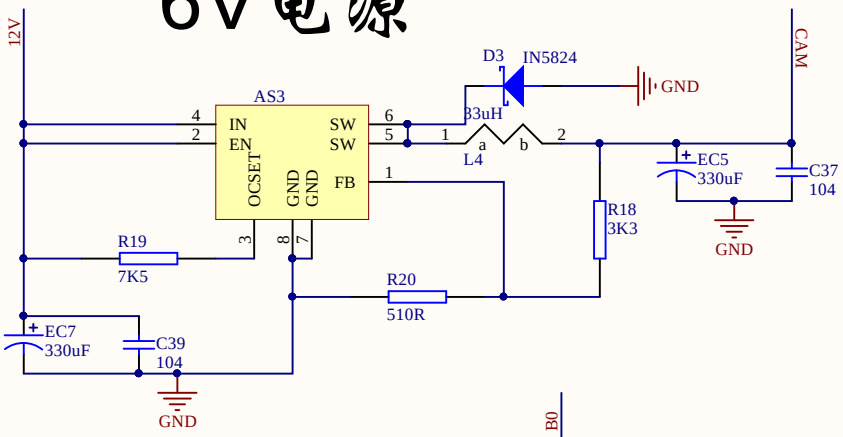

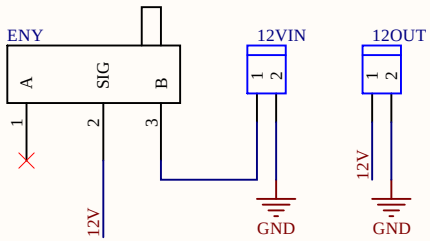

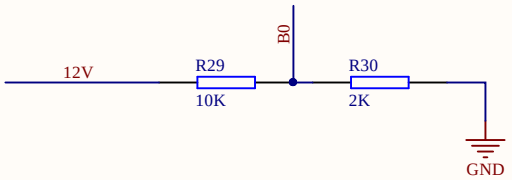

Title		
Size A4	Number	Revision
Date: 2019/11/9星期六	Sheet	of
File: E:\我的电路板\投篮机器人2.0\Energy.SchDoc	Drawn By:	

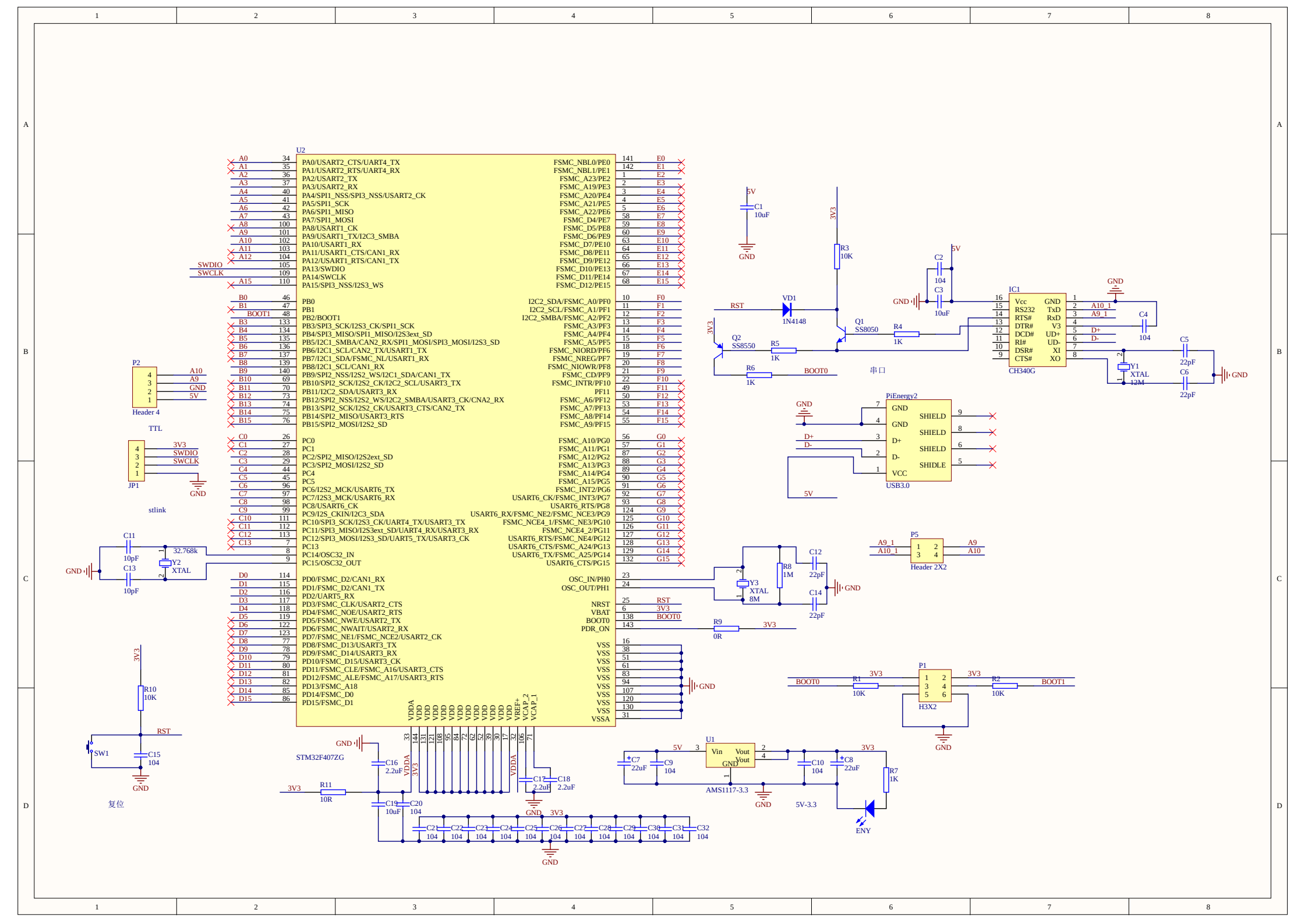
U2
STM32F407ZG
PA0/USART2_CTS/UART4_TX
PA1/USART2_RTS/UART4_RX
PA2/USART2_TX
PA3/USART2_RX
PA4/SPI1_NSS/SPI3_NSS/USART2_CK
PA5/SPI1_SCK
PA6/SPI1_MISO
PA7/SPI1_MOSI
PA8/USART1_CK
PA9/USART1_TX/I2C3_SMBA
PA10/USART1_RX
PA11/USART1_CTS/CAN1_RX
PA12/USART1_RTS/CAN1_TX
PA13/SWDIO
PA14/SWCLK
PA15/SPI3_NSS/I2S3_WS
PB0
PB1
PB2/BOOT1
PB3/SPI3_SCK/I2S3_CK/SPI1_SCK
PB4/SPI3_MISO/SPI1_MISO/I2S3ext_SD
PB5/I2C1_SMBA/CAN2_RX/SPI1_MOSI/SPI3_MOSI/I2S3_SD
PB6/I2C1_SCL/CAN2_TX/USART1_TX
PB7/I2C1_SDA/FSMC_NL/USART1_RX
PB8/I2C1_SCL/CAN1_RX
PB9/SPI2_NSS/I2S2_WS/I2C1_SDA/CAN1_TX
PB10/SPI2_SCK/I2S2_CK/I2C2_SCL/USART3_TX
PB11/I2C2_SDA/USART3_RX
PB12/SPI2_NSS/I2S2_WS/I2C2_SMBA/USART3_CK/CNA2_RX
PB13/SPI2_SCK/I2S2_CK/USART3_CTS/CAN2_TX
PB14/SPI2_MISO/USART3_RTS
PB15/SPI2_MOSI/I2S2_SD
PC0
PC1
PC2/SPI2_MISO/I2S2ext_SD
PC3/SPI2_MOSI/I2S2_SD
PC4
PC5
PC6/I2S2_MCK/USART6_TX
PC7/I2S3_MCK/USART6_RX
PC8/USART6_CK
PC9/I2S_CKIN/I2C3_SDA
PC10/SPI3_SCK/I2S3_CK/UART4_TX/USART3_TX
PC11/SPI3_MISO/I2S3ext_SD/UART4_RX/USART3_RX
PC12/SPI3_MOSI/I2S3_SD/UART5_TX/USART3_CK
PC13
PC14/OSC32_IN
PC15/OSC32_OUT
PD0/FSMC_D2/CAN1_RX
PD1/FSMC_D2/CAN1_TX
PD2/UART5_RX
PD3/FSMC_CLK/USART2_CTS
PD4/FSMC_NOE/USART2_RTS
PD5/FSMC_NWE/USART2_TX
PD6/FSMC_NWAIT/USART2_RX
PD7/FSMC_NE1/FSMC_NCE2/USART2_CK
PD8/FSMC_D13/USART3_TX
PD9/FSMC_D14/USART3_RX
PD10/FSMC_D15/USART3_CK
PD11/FSMC_CLE/FSMC_A16/USART3_CTS
PD12/FSMC_ALE/FSMC_A17/USART3_RTS
PD13/FSMC_A18
PD14/FSMC_D0
PD15/FSMC_D1
FSMC_NBL0/PE0
FSMC_NBL1/PE1
FSMC_A23/PE2
FSMC_A19/PE3
FSMC_A20/PE4
FSMC_A21/PE5
FSMC_A22/PE6
FSMC_D4/PE7
FSMC_D5/PE8
FSMC_D6/PE9
FSMC_D7/PE10
FSMC_D8/PE11
FSMC_D9/PE12
FSMC_D10/PE13
FSMC_D11/PE14
FSMC_D12/PE15
I2C2_SDA/FSMC_A0/PF0
I2C2_SCL/FSMC_A1/PF1
I2C2_SMBA/FSMC_A2/PF2
FSMC_A3/PF3
FSMC_A4/PF4
FSMC_A5/PF5
FSMC_NIORD/PF6
FSMC_NREG/PF7
FSMC_NIOWR/PF8
FSMC_CD/PF9
FSMC_INTR/PF10
PF11
FSMC_A6/PF12
FSMC_A7/PF13
FSMC_A8/PF14
FSMC_A9/PF15
FSMC_A10/PG0
FSMC_A11/PG1
FSMC_A12/PG2
FSMC_A13/PG3
FSMC_A14/PG4
FSMC_A15/PG5
FSMC_INT2/PG6
USART6_CK/FSMC_INT3/PG7
USART6_RTS/PG8
USART6_RX/FSMC_NE2/FSMC_NCE3/PG9
FSMC_NCE4_1/FSMC_NE3/PG10
FSMC_NCE4_2/PG11
USART6_RTS/FSMC_NE4/PG12
USART6_CTS/FSMC_A24/PG13
USART6_TX/FSMC_A25/PG14
USART6_CTS/PG15
OSC_IN/PH0
OSC_OUT/PH1
NRST
VBAT
BOOT0
PDR_ON
VSS
VSSA
VDDA
VREF+
VCAP_2
VCAP_1
P2
Header 4
TTL
JP1
stlink
SWDIO
SWCLK
SW1
复位
Y2
XTAL
32.768k
Y3
XTAL
8M
C1 10uF
C2 104
C3 10uF
C4 104
C5 22pF
C6 22pF
C7 22uF
C8 22uF
C9 104
C10 104
C11 10pF
C12 22pF
C13 10pF
C14 22pF
C15 104
C16 2.2uF
C17 2.2uF
C18 2.2uF
C19 10uF
C20 104
C21 104
C22 104
C23 104
C24 104
C25 104
C26 104
C27 104
C28 104
C29 104
C30 104
C31 104
C32 104
R1 10K
R2 10K
R3 10K
R4 1K
R5 1K
R6 1K
R7 1K
R8 1M
R9 0R
R10 10K
R11 10R
VD1
1N4148
Q1
SS8050
Q2
SS8550
串口
IC1
CH340G
Vcc
RS232
RTS#
DTR#
DCD#
RI#
DSR#
CTS#
GND
TxD
RxD
V3
UD+
UD-
XI
XO
A10_1
A9_1
D+
D-
Y1
XTAL
12M
PiEnergy2
USB3.0
SHIELD
SHIDLE
VCC
P5
Header 2X2
P1
H3X2
U1
AMS1117-3.3
Vin
Vout
5V-3.3
ENY
5V
3V3
GND
BOOT0
BOOT1
RST

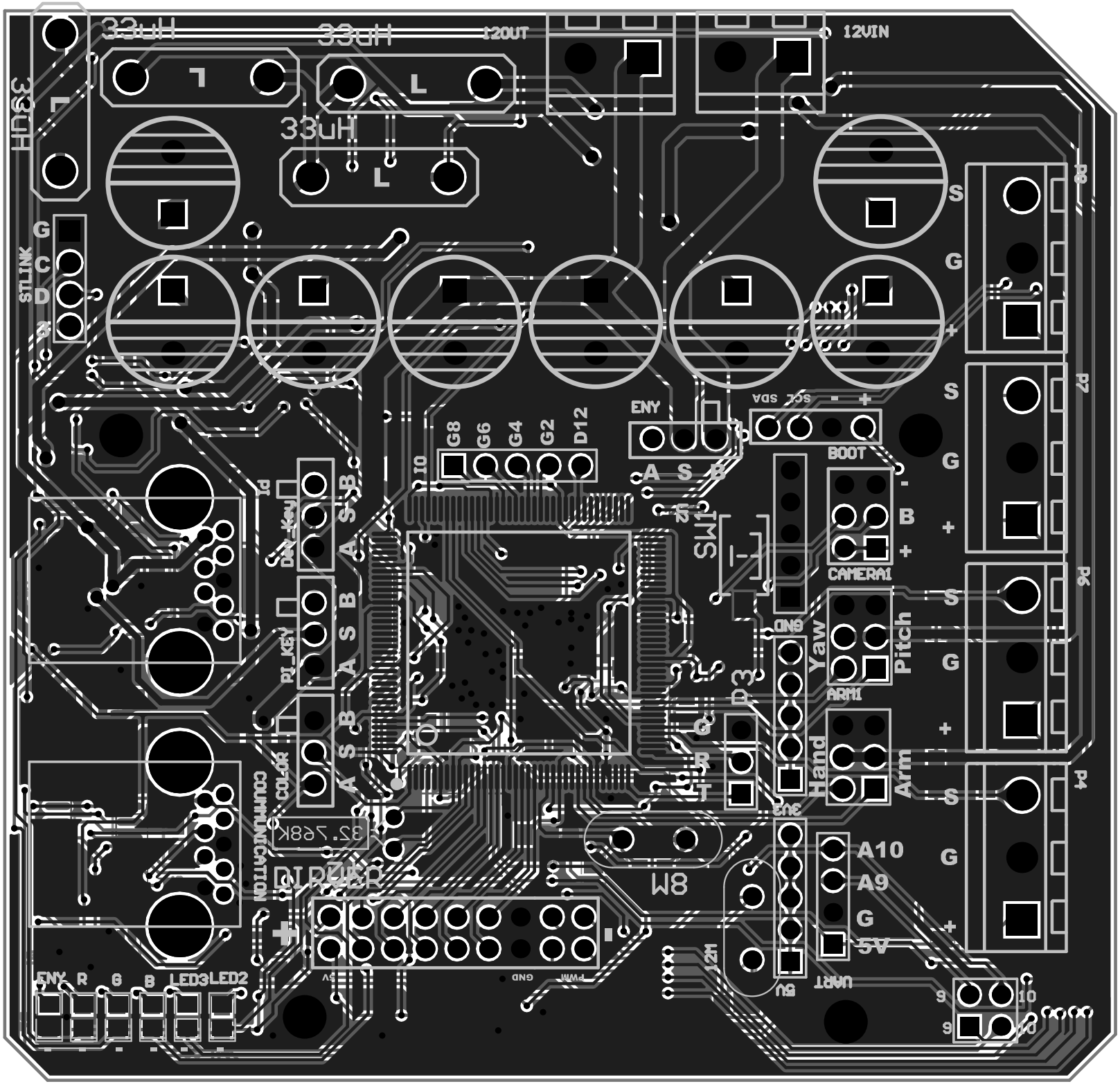
33uH
33uH
33uH
33uH
12OUT
12VIN
STLINK
G
C
D
ENY
A S B
G8 G6 G4 G2 D12
SCL SDA
BOOT
CAMERA1
Yaw
Pitch
ARM1
Hand
Arm
A10
A9
G
5V
UART
5V
12M
PWM
GND
ENY R G B LED3 LED2
COLOR
PI_KEY
DEV_KEY
COMMUNICATION
32.768K
DIPHER
W8
D3
SW1
P8
P7
P6
P4

Comment	Description	Designator	Footprint	LibRef	Quantity
P?			OLED	OLED	1
Header 5	Header, 5-Pin	3V3, 5V, GND, IO	HDR1X5	Header 5	4
HEAD2		12OUT, 12VIN	HEAD2L-0.8	HEAD2	2
L1		33uH	INDUCTOR	INDUCTOR	1
L2		33uH	INDUCTOR	INDUCTOR	1
L3		33uH	INDUCTOR	INDUCTOR	1
L4		33uH	INDUCTOR	INDUCTOR	1
Header3X2	3*2P接插件	ARM1, CAMERA1	HDR-3X2	Header 3X2	2
U1		AS1, AS2, AS3, AS4	AS1015	LED2	4
LED0	LED0	B, ENY, G, LED2, LED3, R	LED[0805]	LED0	6
Cap	Cap	C1, C2, C3, C4, C5, C6, C9, C10, C11, C12, C13, C14, C15, C16, C17, C18, C19, C20, C21, C22, C23, C24, C25, C26, C27, C28, C29, C30, C31, C32, C33, C34, C35, C36, C37, C38, C39, C40	CAP[0805]	Cap	38
Cap Pol(22uF)	Cap Pol(22uF)	C7, C8	CAP[1210]	Cap Pol(22uF)	2
COLOR		COLOR	KEY	key	1
IN5824	肖特基二极管	D1, D2, D3, D4	SMA/DO-214AC	DIODE SCHOTTKY	4
Dev_Key		Dev_Key	KEY	key	1
Dirver2		DIRVER	DIRVER2	Dirver2	1
330uF	直插电解电容	EC1, EC2, EC3, EC4, EC5, EC6, EC7, EC8	DIP-EC5.0X10X12.5	DIP_ECAP	8
ENY		ENY	KEY	key	1
CH340G	串口转USB	IC1	SOP16_M	CH340G	1
HDR-1X4	4P接插件	JP1	HDR-1X4_M	Header 4	1
H3X2	H3X2	P1	H2.54-2X3	H3X2	1
Header 4	Header, 4-Pin	P2	HDR1X4	Header 4	1
Header 3	Header, 3-Pin	P3	HDR1X3	Header 3	1
Infra		P4, P6, P7, P8	Infra	Infra	4
Header 2X2	Header, 2-Pin, Dual row	P5	HDR2X2	Header 2X2	1
PI_KEY		PI_KEY	KEY	key	1
USB3.0		PiEnergy1, PiEnergy2	USB3.0	USB3.0	2
SS8050	高频放大-NPN型	Q1	SOT23-3M	8050-SMD	1
SS8550	高频放大-PNP型	Q2	SOT23-3M	8550-SMD	1
10K		R1, R2, R3, R10, R29	R0805	RES	5
1K		R4, R5, R6, R7, R15, R23, R24, R25, R26, R27, R28	R0805	RES	11
1M		R8	R0805	RES	1
0R		R9	R0805	RES	1
10R		R11	R0805	RES	1
5K6		R12, R21	R0805	RES	2
7K5		R13, R16, R19, R22	R0805	RES	4
3K3		R14, R18	R0805	RES	2
510R		R17, R20	R0805	RES	2
2K		R30	R0805	RES	1
3x6x5	3x6轻触开关	SW1	TSW SMD-3*6*2.5	TSW 3x6	1
AMS1117-3.3		U1	SOT-223(AMS1117-3.3)	AMS1117-3.3	1
STM32F407ZG	Flaah:1024/RAM:192/IO:114	U2	LQFP144 20X20_M	STM32F407ZG	1
1N4148	高速开关二极管	VD1	MINI_MELF (LL34)	1N4148	1
XTAL	XTAL	Y1, Y3	XTAL	XTAL_1	2
XTAL	XTAL	Y2	XTAL-DT38-SMD	XTAL	1