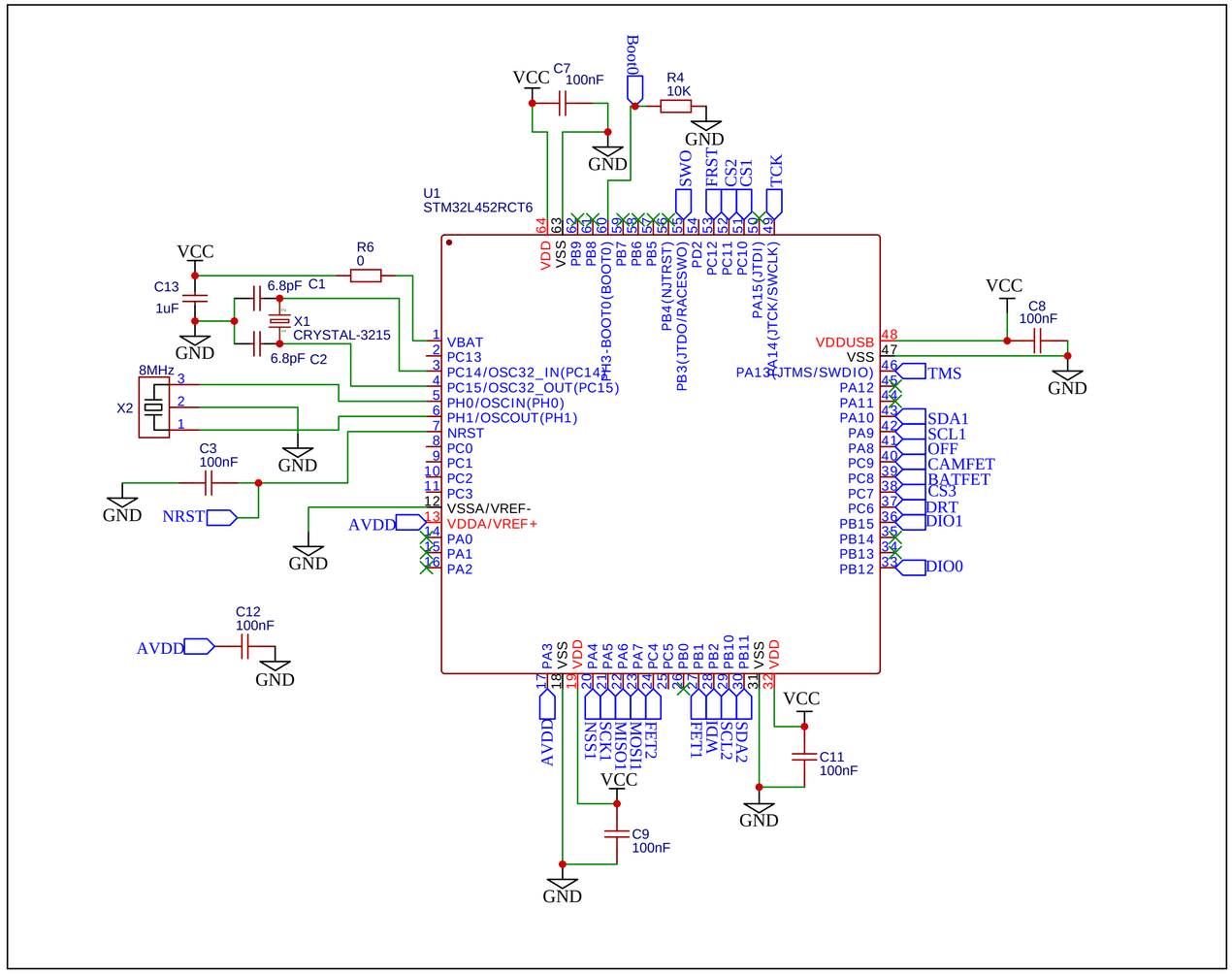

TX CURRENT LIMIT

OBC/FLASH CURRENT LIMIT

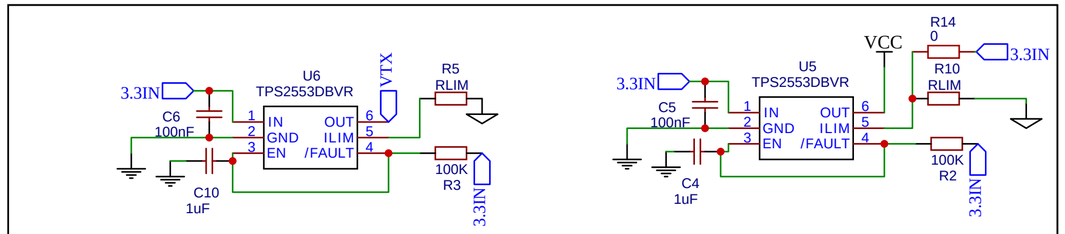

I2C TEMP. SENSOR

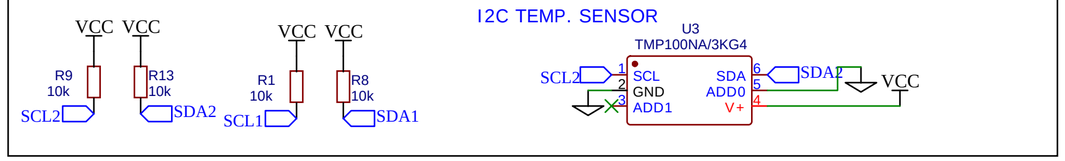

WATCHDOG

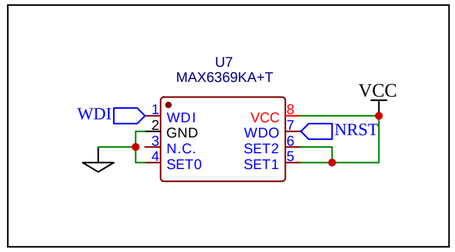

LoRa Transmitter

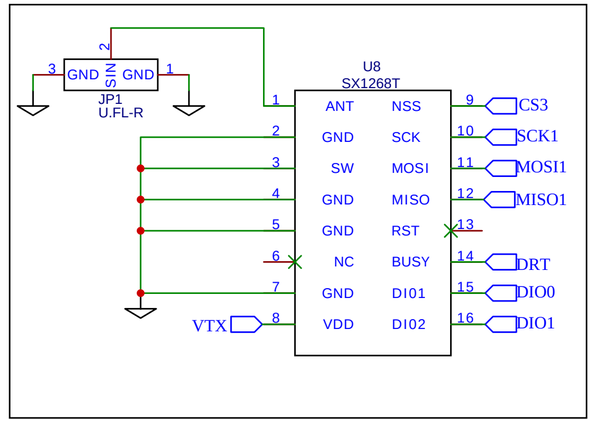

Flash Storage

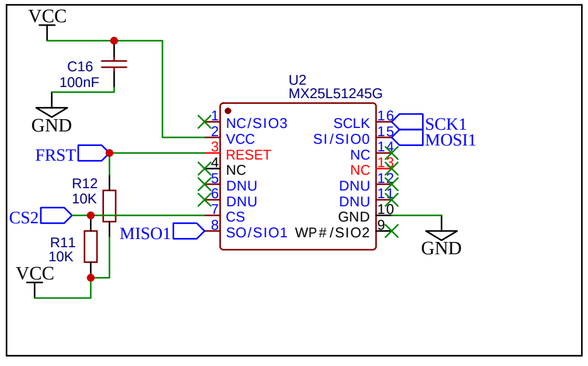

Programming Connectors

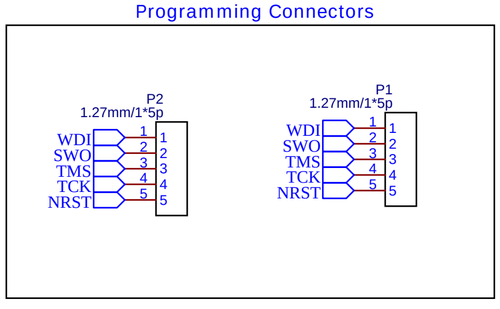

BUS Headers

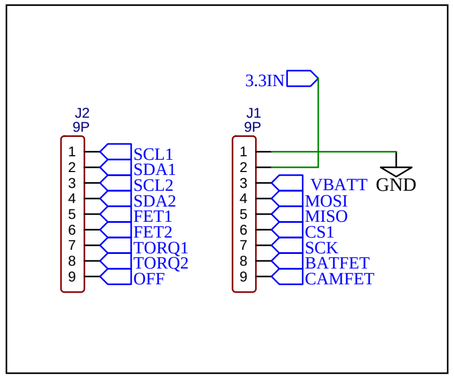

MOLEX

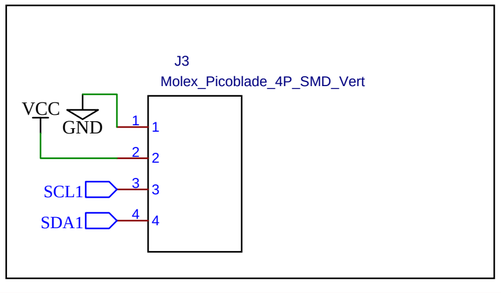

TITLE: FossaSat-2 OBC		REV: 1.0
FOSSA	Company: FOSSA SYSTEMS	Sheet: 1/1
	Date: 2019-09-25 Drawn By: Julian Fernandez	