Solving Shallow Water Equation with Spherical Fourier Neural Operator

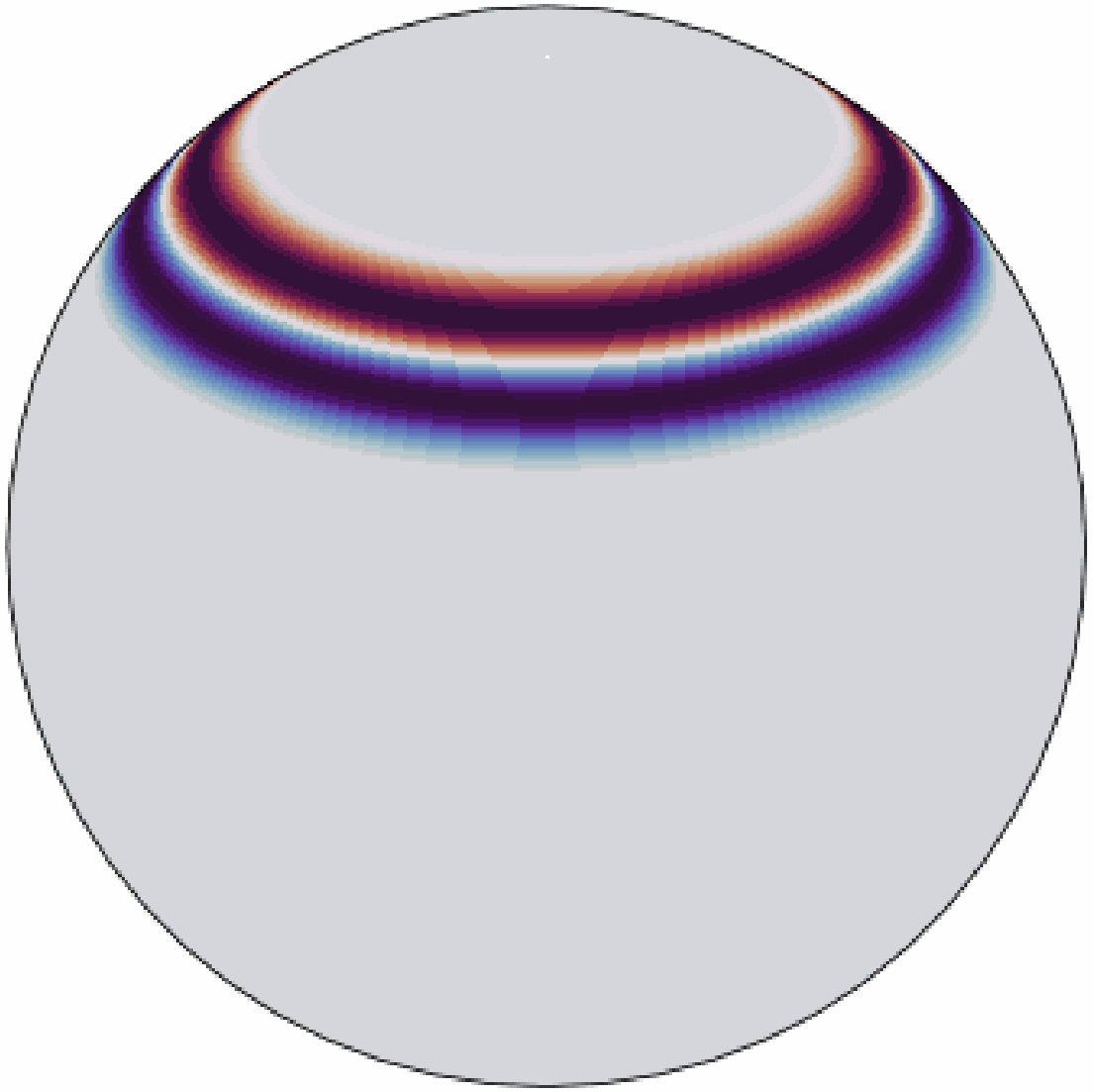

CS598

Spring 2026

April 23, 2026

(with torch_harmonics)

Why Shallow Water Equations?

- Good approximation to oceanic and atmospheric waves
- Derived from Navier-Stokes

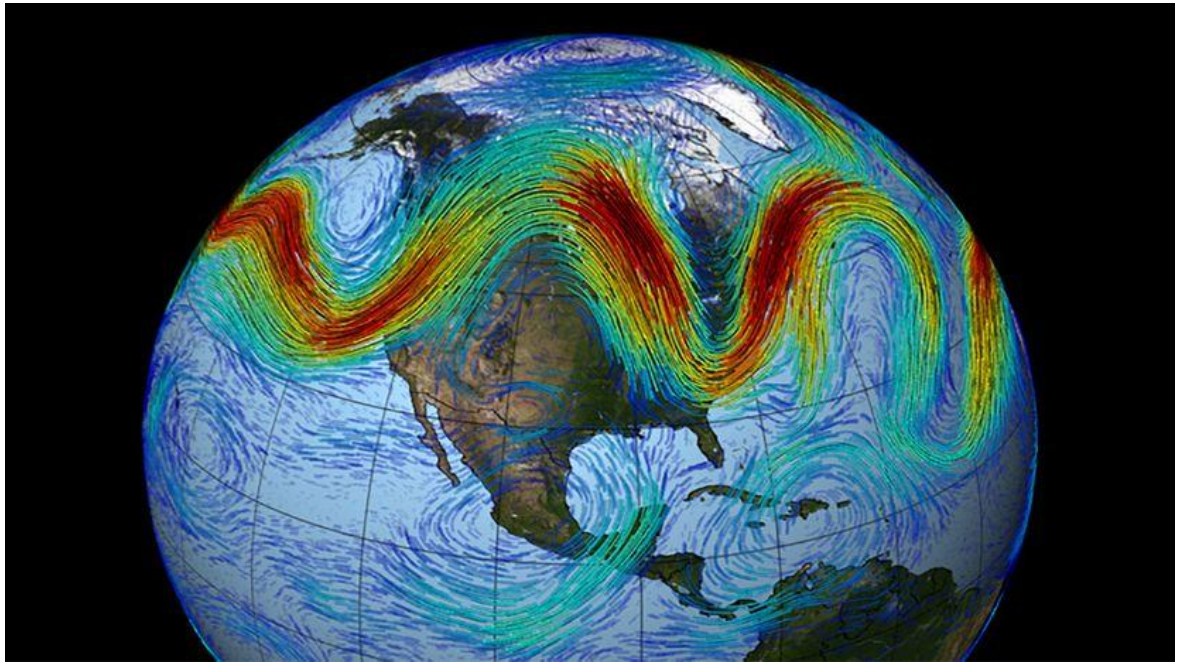

NASA/GSFC

Fourier Neural Operator

- Discrete Fourier Transform

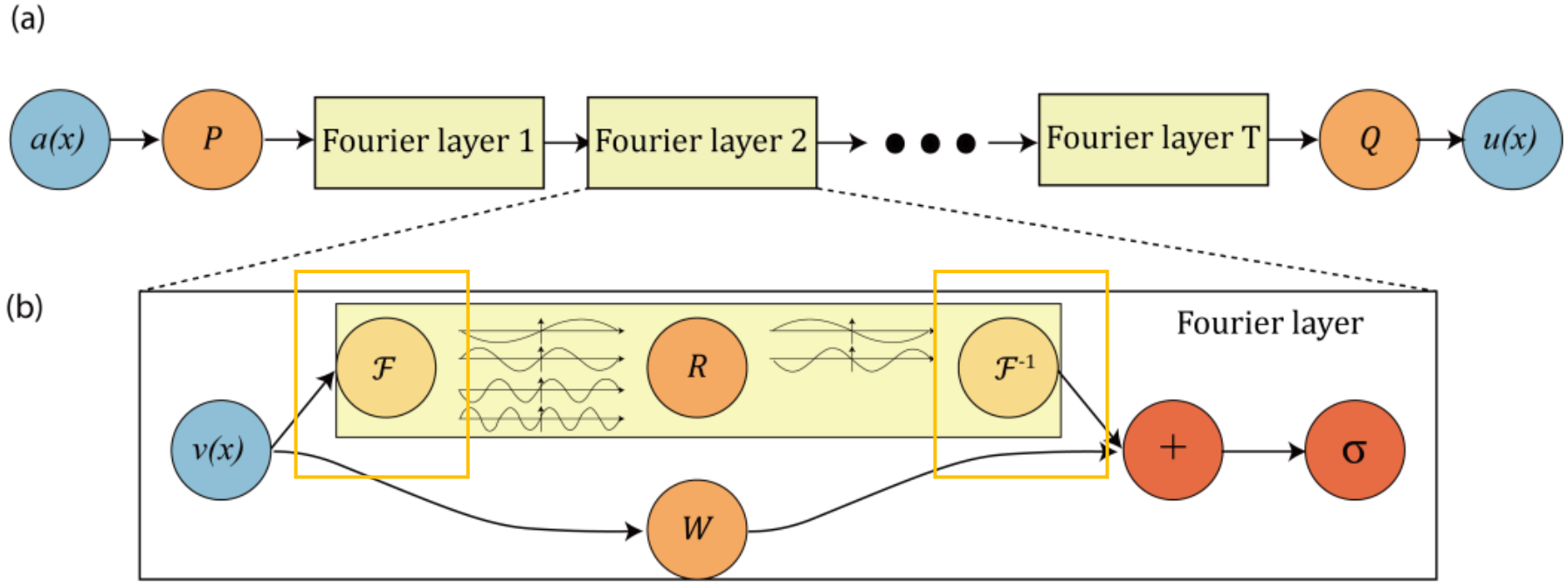

(a) The full architecture of neural operator: start from input a. 1. Lift to a higher dimension channel space by a neural network P. 2. Apply four layers of integral operators and activation functions. 3. Project back to the target dimension by a neural network Q. Output u. **(b) Fourier layers**: Start from input v. On top: apply the Fourier transform $\mathcal{F}$; a linear transform R on the lower Fourier modes and filters out the higher modes; then apply the inverse Fourier transform $\mathcal{F}^{-1}$. On the bottom: apply a local linear transform W.

Figure 2: **top:** The architecture of the neural operators; **bottom:** Fourier layer.

Li et al. (2020)

Spherical FNO

- Generalize onto S2 sphere Fourier Space with Spherical Harmonics space
  - Accounts for rotation

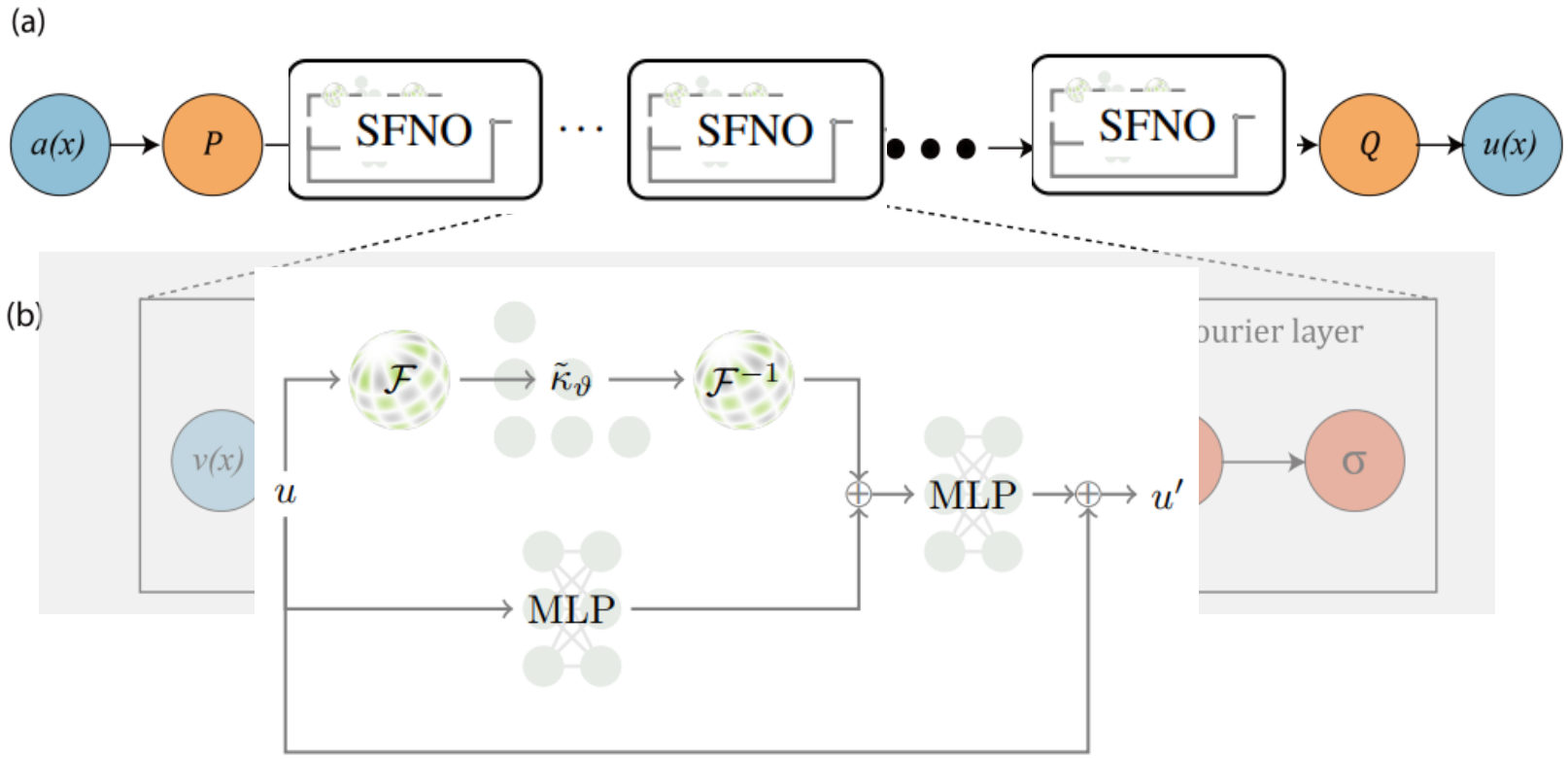

Bonev et al. 2023 (top) ; Li et al. 2020 (bottom)

Loss function Sensitivity

Loss Function: Relative L2 Loss Function

$$\sqrt{\frac{\sum_{i=1}^{n}\left(y_{target,i} - y_{predicted,i}\right)^2}{\sum_{i=1}^{n} y_{target,i}^2}}$$

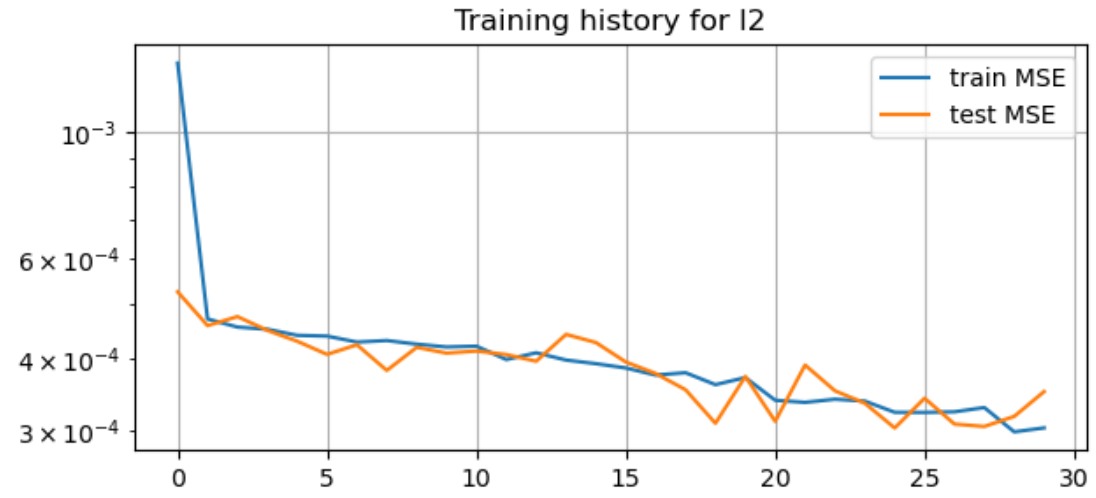

Test hop around train curve due to optimizer behavior and finite-sample noise.

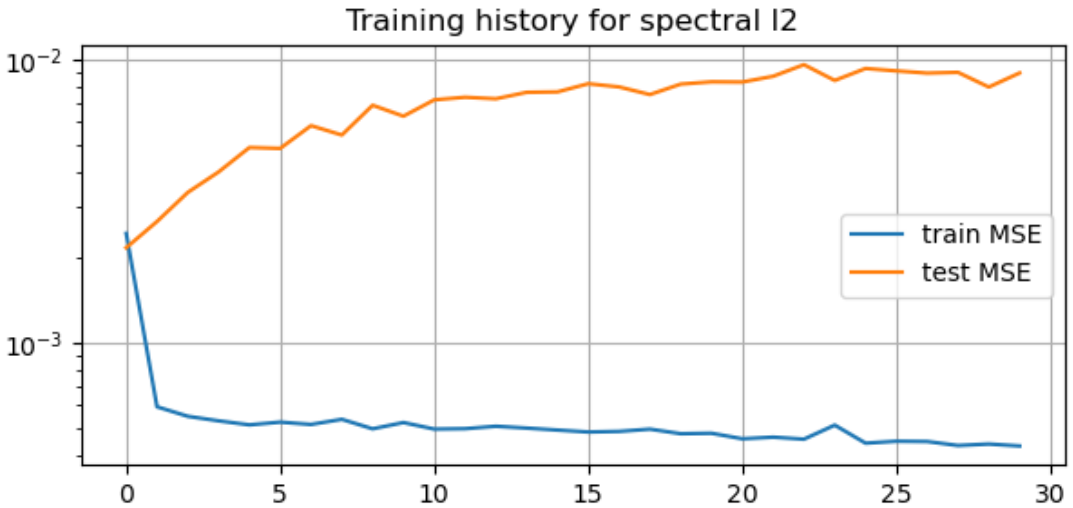

Overfit due to equal weights to physical low frequencies and erratic noisy high frequency modes.

Future Questions

- Equivariance when baked-into architecture:
  - Max resolution of feature that it could learn? Is there a limit?
- Asymmetry in earth systems: learn from data:
  - Ratio of dependency to architecture vs input data? Is there a threshold – depend on what? (hypothesis: depends on training data – then will training data res be the limitation then?)