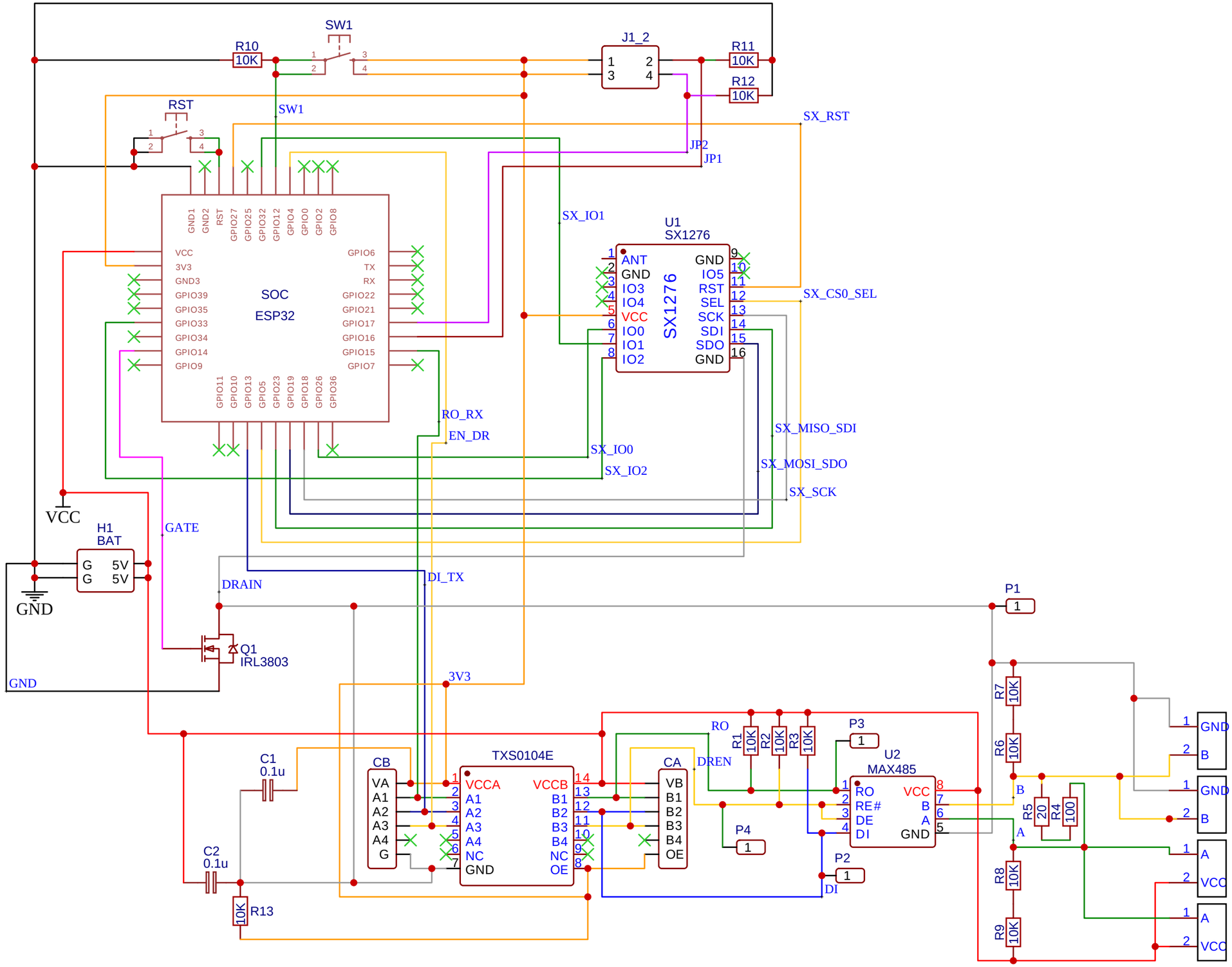

TITLE: SMT100-LoRa-v0.9	REV: 0.9
5G-PreCiSe	Company: 5G-PreCiSe / HS Reutlingen
	Sheet: 1/1
	Date: 2023-01-26
	Drawn By: Sebastian Kotstein