CAD GENERATED DOCUMENT. ALL CHANGES MAY ONLY BE MADE WITHIN NATIVE CAD FILE. REVISION HISTORY CONTAINED WITHIN PDM REPOSITORY.

REVISIONS			
ZONE	REV	DESCRIPTION	DATE
	-	INITIAL RELEASE	1/19/2019

NOTES: UNLESS OTHERWISE SPECIFIED (UOS)

1. ALL ITEMS DEPICTED ON THIS DRAWING ARE CRITICAL TO THE FUNCTION OF THIS PART. ALL DIMENSIONS NOT DEPICTED ARE CONTAINED WITHIN THE FOLLOWING INTERMEDIATE FILES:
   - -[APPLICABLE DASH]: OH2A2A3-[APPLICABLE DASH] - [APPLICABLE DESCRIPTION].STL (PRINTED PARTS)
   - -[APPLICABLE DASH]: OH2A1-LEGENDS.DXF (LEGEND PLATES)
   - -[APPLICABLE DASH]: OH2A1-LIGHTPLATES.DXF (LIGHT PLATES)
   - -[APPLICABLE DASH]: OH2A1-BACKPLATES.DXF (BACKPLATES)

2. SEAL/SAND/PRIME/PAINT ALL EXTERNAL SURFACES FS37038, LUSTERLESS BLACK IAW FINISH SPECIFICATION; TOPCOAT FOR ALL LEGENDS SHALL BE FS37875, INSIGNIA WHITE. MASK ALL THREADS AND HOLES.

3. SEAL/SAND/PRIME/PAINT ALL EXTERNAL SURFACES FS36231, DARK GULL GREY IAW FINISH SPECIFICATION; TOPCOAT FOR INDICIA SHALL BE FS37875, INSIGNIA WHITE ; TOPCOAT FOR INDICIA BORDER SHALL BE FS37038, LUSTERLESS BLACK. MASK ALL THREADS AND HOLES.

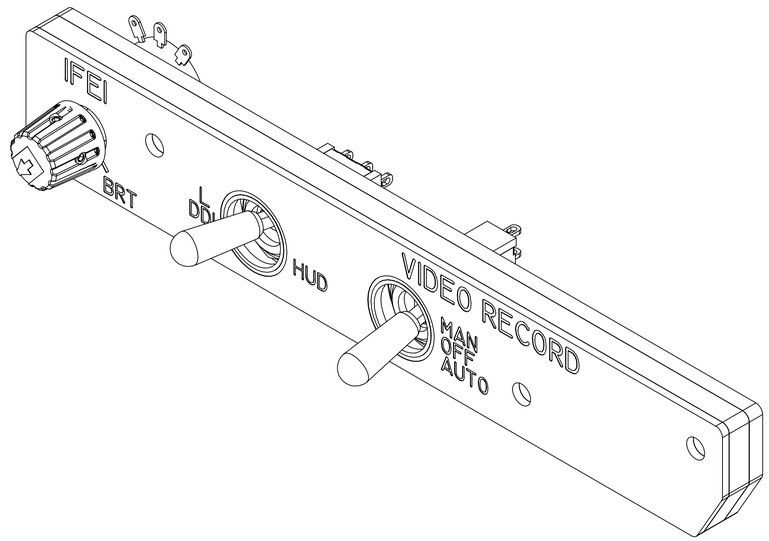

-1

PARTS LIST						
QTY.	PART NUMBER	DESCRIPTION	MATERIAL	MFR	TYPE	ITEM NO.
1	OH2A2A3-10	HUD VIDEO RECORD PANEL BACKPLATE	.125 ACRYLIC	OPENHORNET	CNC	1
1	OH2A2A3-11	HUD VIDEO RECORD PANEL LIGHTPLATE	.1875 ACRYLIC	OPENHORNET	CNC	2
1	OH2A2A3-12	HUD VIDEO RECORD PANEL LEGEND PLATE	.0625 ACRYLIC	OPENHORNET	CNC	3
1	OH2A2A3-13	KNOB, MS21382	PETG	OPENHORNET	PRINT	4
1	100SP3T8B13M1QEH	SWITCH, TOGGLE, SPDT, 18mm BAT	N/A	E-SWITCH	COTS	5
1	100SP1T8B13M1QEH	SWITCH, TOGGLE, SPDT, 18mm BAT	N/A	E-SWITCH	COTS	6
1	P170S-FC20BR10K	POT, 10K, PANEL MOUNT, SIDE ADJUST, LUGS, ON-OFF SWITCH	N/A	TT ELECTRONICS/BI	COTS	7
2	92311A102	SCREW, SET, 4-40 X .093, CUP POINT, HEX DRIVE, 18-8	18-8 SS	MCMASTER-CARR	COTS	8

OH2A1	LIP
NEXT ASSY	USED ON
APPLICATION	

THIRD ANGLE PROJECTION

APPROVALS	DATE
DRAWN J. STEENSEN	1/19/2020

MATERIAL
SEE PARTS LIST

FINISH
SEE FINISH SPEC

CC BY NC SA

UNLESS OTHERWISE SPECIFIED:

DIMENSIONS ARE IN INCHES.

DUAL DIMENSIONS ARE IN MILLIMETERS AND ENCLOSED IN SQUARE BRACKETS.

INTERPRET DRAWING IAW ASME Y14.100-2013.

INTERPRET DIM AND TOL IAW ASME Y14.5-2009.

REMOVE ALL BURRS AND SHARP EDGES TO .1 MAX.

DIMENSIONS APPLY BEFORE FINISH.

UOS INCH TOLERANCES ARE:

DECIMALS:
.X ± .1
.XX ± .03
.XXX ± .010

ANGLES:
MACHINED ±0°30'
LOCATING ±0°30'
FORMED ±2°
CHAMFERS ±5°

HOLE DIAMETERS:
0 - .0140: +.0020 / -.0005
.014 - .125: +.004 / -.001
.126 - .250: +.005 / -.001
.251 - .500: +.006 / -.001
.501 - .750: +.008 / -.001
.751 - 1.000: +.010 / -.001
1.001 - 2.000: +.012 / -.001
2.000+: +.015 / -.005

OPEN HORNET
https://www.OpenHornet.com

TITLE
ASSY, PANEL, VIDEO RECORD

SIZE	DWG NO.	REV.
D	OH2A2A3	-

SCALE NONE | SHEET 1 OF 3

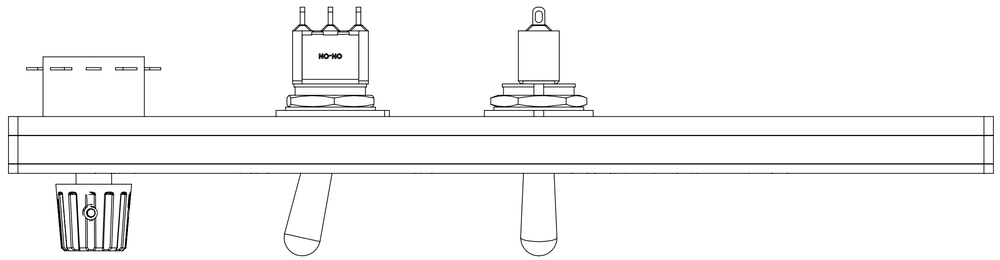

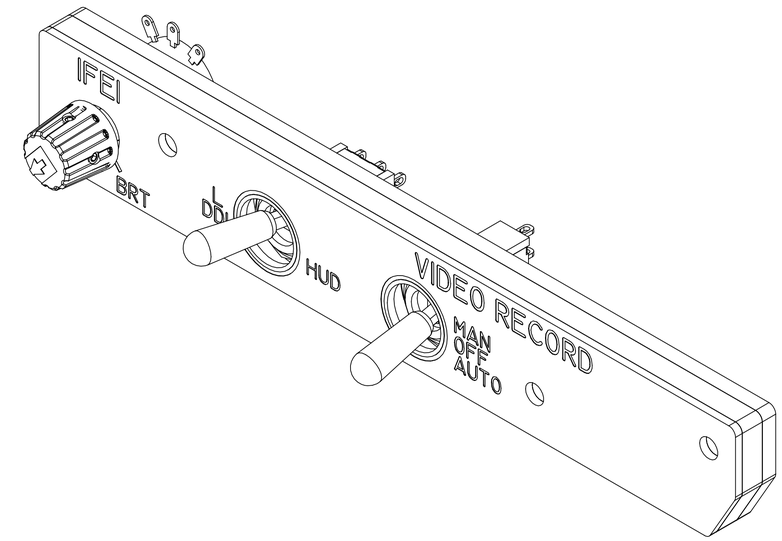

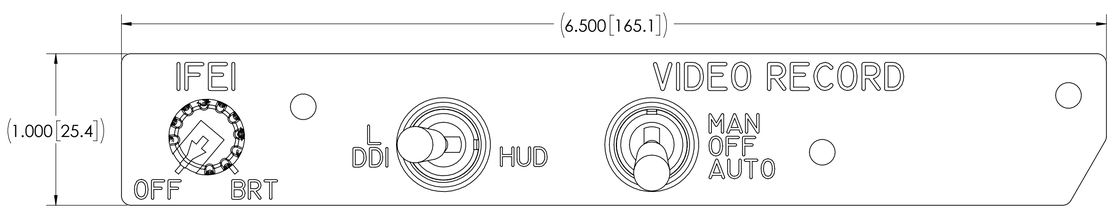

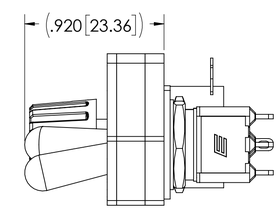

BY NC SA

OPEN HORNET
https://www.OpenHornet.com

SIZE	DWG NO.	REV.
D	OH2A2A3	-
SCALE NONE		SHEET 2 OF 3

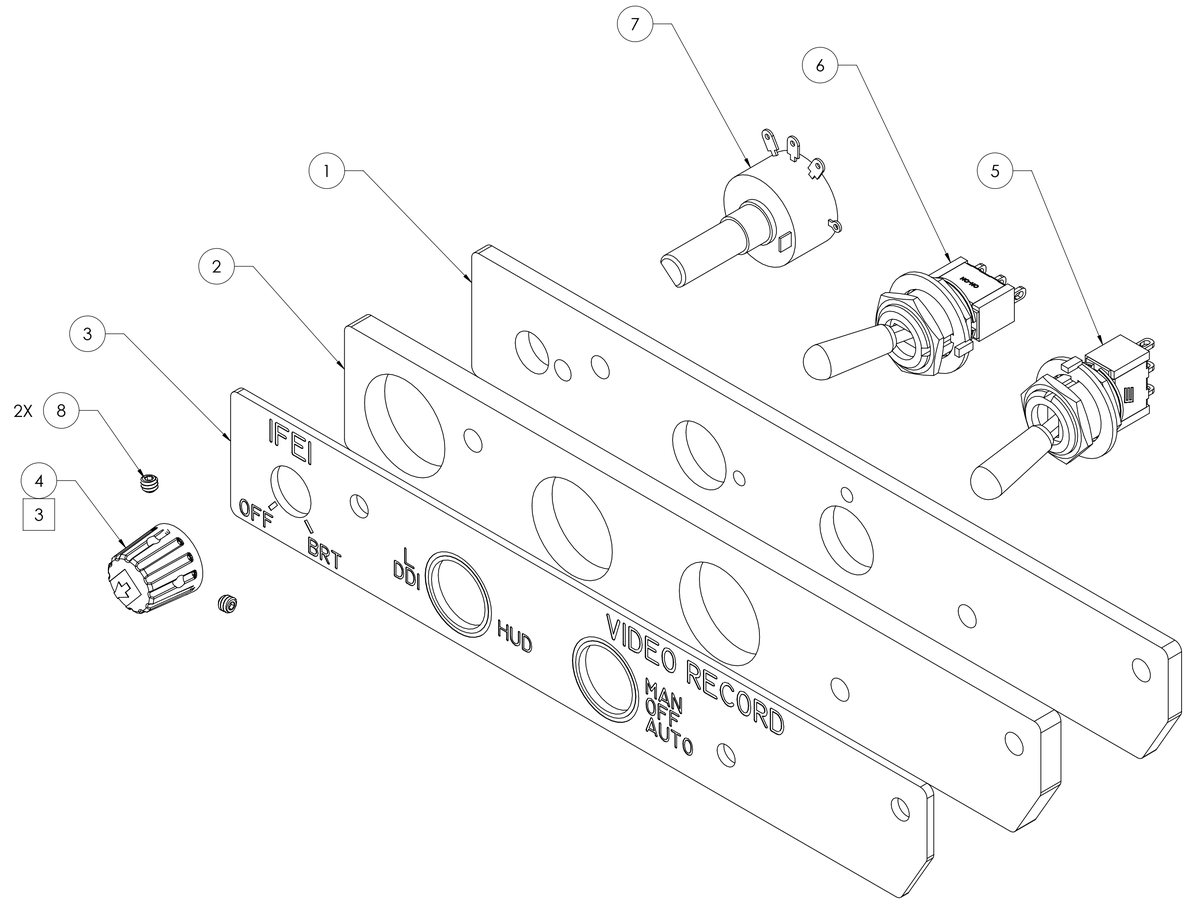

BY NC SA

OPEN HORNET
https://www.OpenHornet.com

SIZE	DWG NO.	REV.
D	OH2A2A3	-
SCALE NONE		SHEET 3 OF 3