CAD GENERATED DOCUMENT. ALL CHANGES MAY ONLY BE MADE WITHIN NATIVE CAD FILE. REVISION HISTORY CONTAINED WITHIN PDM REPOSITORY.

REVISIONS			
ZONE	REV	DESCRIPTION	DATE
	-	INITIAL RELEASE	11/14/2019

NOTES: UNLESS OTHERWISE SPECIFIED (UOS)

1. ALL ITEMS DEPICTED ON THIS DRAWING ARE CRITICAL TO THE FUNCTION OF THIS PART. ALL DIMENSIONS NOT DEPICTED ARE CONTAINED WITHIN THE FOLLOWING INTERMEDIATE FILES:
   - -[APPLICABLE DASH]: OH1A2A-[APPLICABLE DASH].STL (PRINTED PARTS)
   - -[APPLICABLE DASH]: OH1A-LEGENDS.DXF (LEGEND PLATES)
   - -[APPLICABLE DASH]: OH1A-LIGHTPLATES.DXF (LIGHT PLATES)
   - -[APPLICABLE DASH]: OH1A-BACKPLATES.DXF (BACKPLATES)
   - -[APPLICABLE DASH]: OH1A-INDICATORCOVERS.DXF (INDICATOR COVERS)
   - -[APPLICABLE DASH]: OH1A-INDICATORLEGENDS.DXF (INDICATOR LEGENDS)
   - -[APPLICABLE DASH]: OH1A-DIFFUSERSGREEN.DXF (INDICATOR DIFFUSERS, GREEN)
   - -[APPLICABLE DASH]: OH1A-DIFFUSERSAMBER.DXF (INDICATOR DIFFUSERS, AMBER)

2. SAND/PRIME/PAINT ALL EXTERNAL PARTS IAW FINISH SPECIFICATION. 2X PRIME COAT(S)/2X TOPCOAT(S). MASK ALL THREADS AND HOLES.

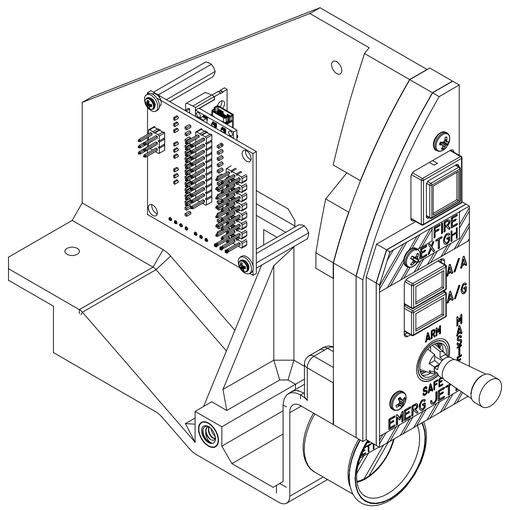

-1

QTY.	PART NUMBER	DESCRIPTION	MATERIAL	MFR	TYPE	ITEM NO.
1	OH1A2A-10	MASTER ARM LEGENDPLATE	322402		CNC	1
1	OH1A2A-11	MASTER ARM LIGHTPLATE	ACRYLIC		CNC	2
1	OH1A2A-12	MASTER ARM BACKPLATE	ACRYLIC/PETG		CNC	3
1	OH1A2A-13	MASTER ARM PANEL SPACER	PETG		PRINT	4
1	OH1A2A-14	BRACKET, MASTER ARM PANEL	PETG		PRINT	5
1	S1AL	SWITCH, SPST, LOCKING, LARGE BAT	N/A	NKK SWITCHES	COTS	6
1	OH1A2A-20	MASTER MODE PUSHBUTTON BASE	PETG		PRINT	7
2	OH1A2A-21	MASTER MODE PUSHBUTTON BEZEL	PETG		PRINT	8
1	OH1A2A-22	MASTER MODE PUSHBUTTON LEGEND, A-G	TRANSPARENT FILM		SCREEN PRINT	9
2	OH1A2A-23	MASTER MODE PUSHBUTTON LEGEND COVER	.0625 TRANSPARENT ACRYLIC		CNC	10
2	OH1A2A-24	MASTER MODE PUSHBUTTON LEGEND DIFFUSER, GREEN	GREEN FILM		CUT	11
2	OH1A2A-25	MASTER MODE PUSHBUTTON ACTUATOR	PETG		PRINT	12
1	OH1A2A-26	MASTER MODE PUSHBUTTON LEGEND, A-A	TRANSPARENT FILM		SCREEN PRINT	13
1	OH1A2A-27	MASTER MODE PUSHBUTTON PCB	PCB		PCB	14
4	99461A505	PHS, 0-42 X .125, SELF TAPPING, 18-8	18-8 SS	MCMASTER-CARR	COTS	15
1	OH1A2A-30	.55 SQ INDICATOR BEZEL	PETG		PRINT	16
1	OH1A2A-31	.55 SQ INDICATOR LEGEND COVER	.0625 TRANSPARENT ACRYLIC		CNC	17
1	OH1A2A-32	.55 SQ INDICATOR LEGEND, DISCH/READY	TRANSPARENT FILM		SCREEN PRINT	18
1	OH1A2A-33	.55 SQ INDICATOR ACTUATOR	PETG		PRINT	19
1	OH1A2A-34	.55 SQ INDICATOR LEGEND DIFFUSER, GREEN	GREEN FILM		CUT	20
1	OH1A2A-35	.55 SQ INDICATOR LEGEND DIFFUSER, AMBER	AMBER FILM		CUT	21
1	OH1A2A-36	.55 SQ INDICATOR BASE	PETG		PRINT	22
1	OH1A2A-37	.55 SQ INDICATOR PCB	PCB		PCB	23
3	99461A505	PHS, 0-42 X .125, SELF TAPPING, 18-8	18-8 SS	MCMASTER-CARR	COTS	24
1	KM1101RR02QE	SWITCH, SPST, PUSHBUTTON	N/A	C&K	COTS	25
1	OH1A2A-40	EMERG JETT HOUSING	PETG		PRINT	26
1	OH1A2A-41	EMERG JETT BUTTON	PETG		PRINT	27
1	1692K52	SPRING, CONICAL, .375 OAL X .600 X .313, .262LBS MAX LOAD	STEEL	MCMASTER-CARR	COTS	28
3	98430A116	RING, RETAINING, EXTERNAL, SELF-LOCKING, .125 OD	STEEL	MCMASTER-CARR	COTS	29
2	91249A156	PHS, 6-32 X .8750, 18-8, BLACK-OXIDE	18-8	MCMASTER-CARR	COTS	30
1	91249A148	PHS, 6-32 X .500, 18-8, BLACK-OXIDE	18-8	MCMASTER-CARR	COTS	31
3	93365A130	INSERT, 6-32, HEAT SET, BRASS	BRASS	MCMASTER-CARR	COTS	32
3	92141A008	WASHER, #6, 18-8	18-8	MCMASTER-CARR	COTS	33
3	90760A007	NUT, 6-32, JAM, STEEL, ZINC-PLATED	STEEL	MCMASTER-CARR	COTS	34
3	90471A220	FHS, 100 CSK, 6-32 X .500, STEEL, ZINC	STEEL	MCMASTER-CARR	COTS	35
2	93365A110	INSERT, 2-56, HEAT SET, BRASS	BRASS	MCMASTER-CARR	COTS	36
1	ABSIS NANO IO	ABSIS NANO IO PCB	PCB		PCB	37
2	93505A217	STANDOFF, HEX, 2-56 X 1.00, M TO F, ALUM	6061-T6	MCMASTER-CARR	COTS	38
2	94070A076	PHS, 2-56 X .1875, BRASS	BRASS	MCMASTER-CARR	COTS	39
2	92141A003	WASHER, 2-56 X .250 OD, 18-8	18-8	MCMASTER-CARR	COTS	40
1	93365A160	INSERT, .25-20, HEAT SET, BRASS	BRASS	MCMASTER-CARR	COTS	41

OH1A	UPPER INSTRUMENT PANEL
NEXT ASSY	USED ON
APPLICATION	

THIRD ANGLE PROJECTION

APPROVALS	DATE
DRAWN J. STEENSEN	2019/11/14

MATERIAL: SEE PARTS LIST

FINISH: SEE FINISH SPEC

CC BY NC SA

UNLESS OTHERWISE SPECIFIED:

DIMENSIONS ARE IN INCHES.

DUAL DIMENSIONS ARE IN MILLIMETERS AND ENCLOSED IN SQUARE BRACKETS.

INTERPRET DRAWING IAW ASME Y14.100-2013.

INTERPRET DIM AND TOL IAW ASME Y14.5-2009.

REMOVE ALL BURRS AND SHARP EDGES TO .1 MAX.

DIMENSIONS APPLY BEFORE FINISH.

UOS INCH TOLERANCES ARE:

DECIMALS:
.X ± .1
.XX ± .03
.XXX ± .010

ANGLES:
MACHINED ±0°30'
LOCATING ±0°30'
FORMED ±2°
CHAMFERS ±5°

HOLE DIAMETERS:
0 - .0140: +.0020 / -.0005
.014 - .125: +.004 / -.001
.126 - .250: +.005 / -.001
.251 - .500: +.006 / -.001
.501 - .750: +.008 / -.001
.751 - 1.000: +.010 / -.001
1.001 - 2.000: +.012 / -.001
2.000+: +.015 / -.005

OPEN HORNET
https://www.OpenHornet.com

TITLE: ASSY, MASTER ARM PANEL

SIZE	DWG NO.	REV.
D	OH1A2A	-

SCALE: NONE

SHEET 1 OF 4

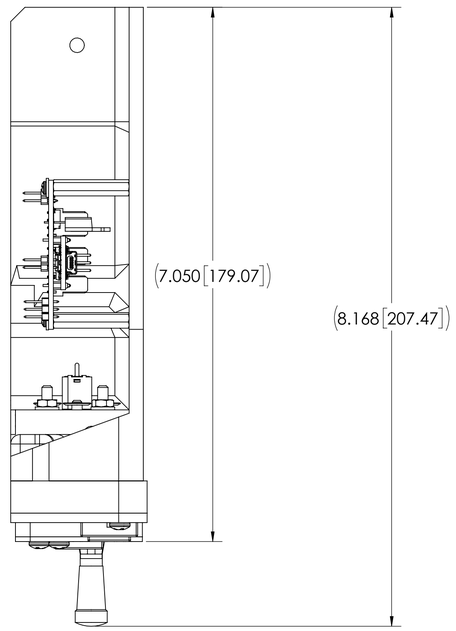

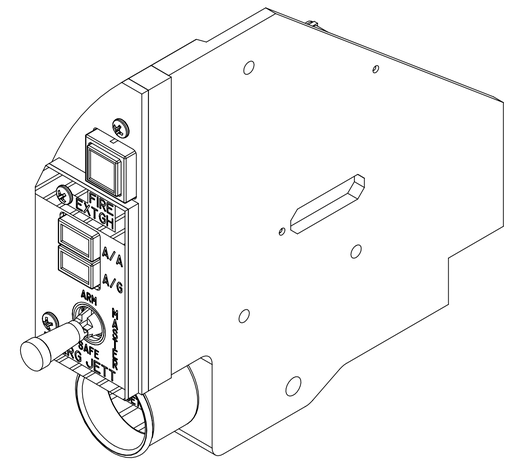

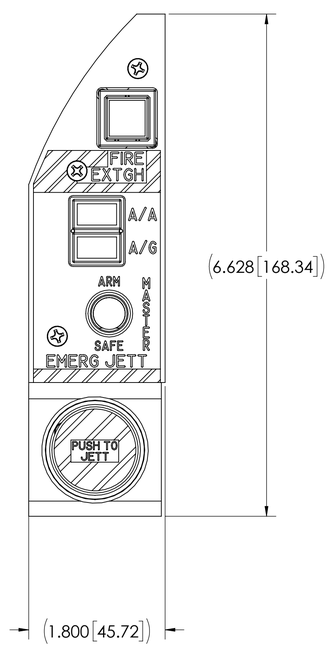

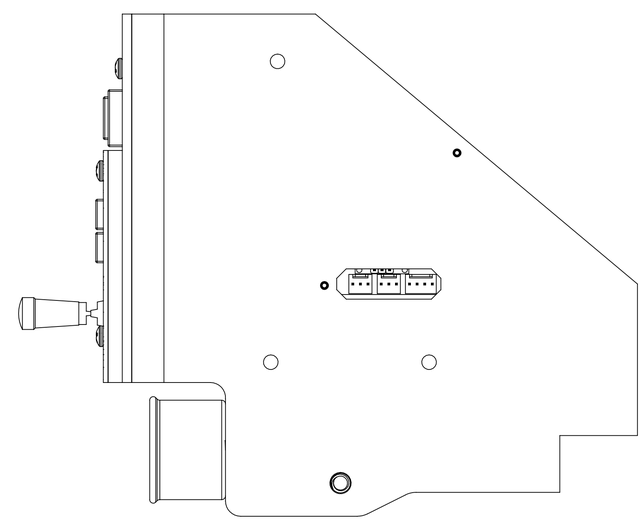

OPEN HORNET
https://www.OpenHornet.com

CC BY NC SA

SIZE	DWG NO.	REV.
D	OH1A2A	-
SCALE NONE		SHEET 2 OF 4

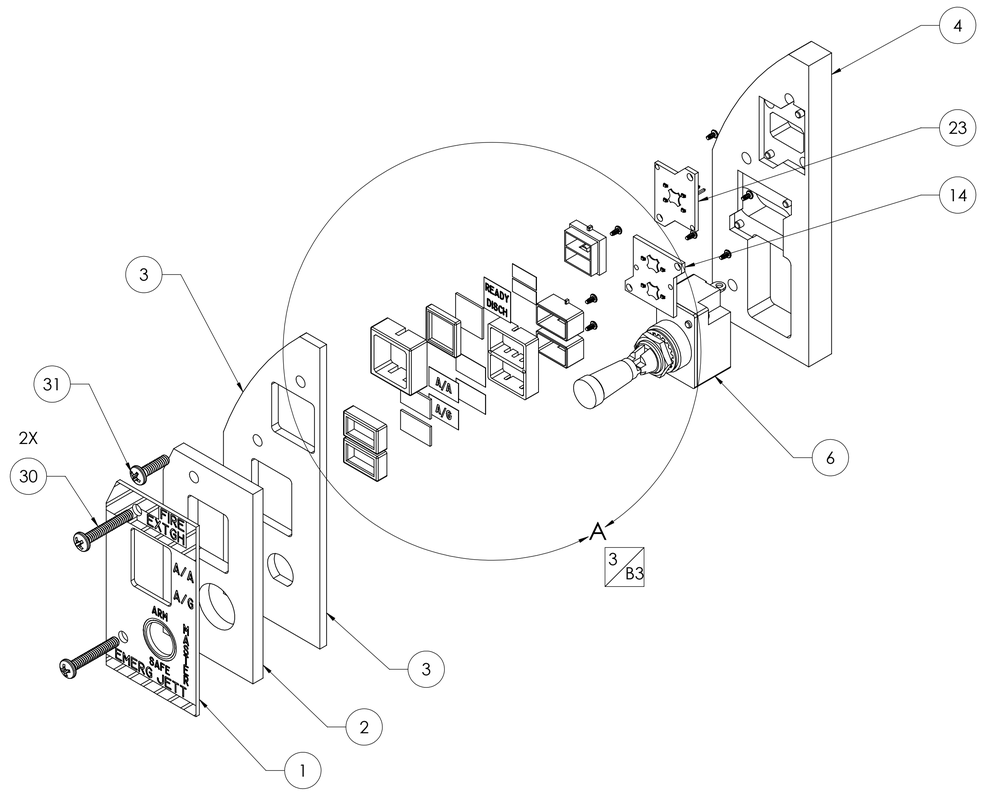

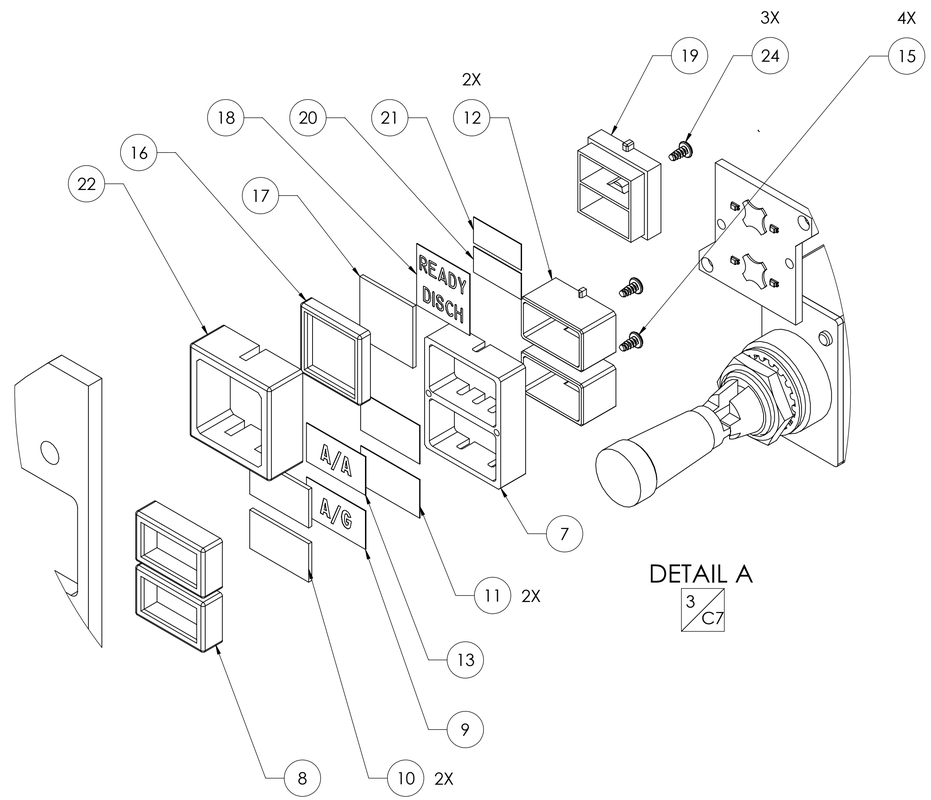

DETAIL A

3/C7

OPEN HORNET
https://www.OpenHornet.com
BY NC SA

SIZE	DWG NO.	REV.
D	OH1A2A	-
SCALE NONE		SHEET 3 OF 4

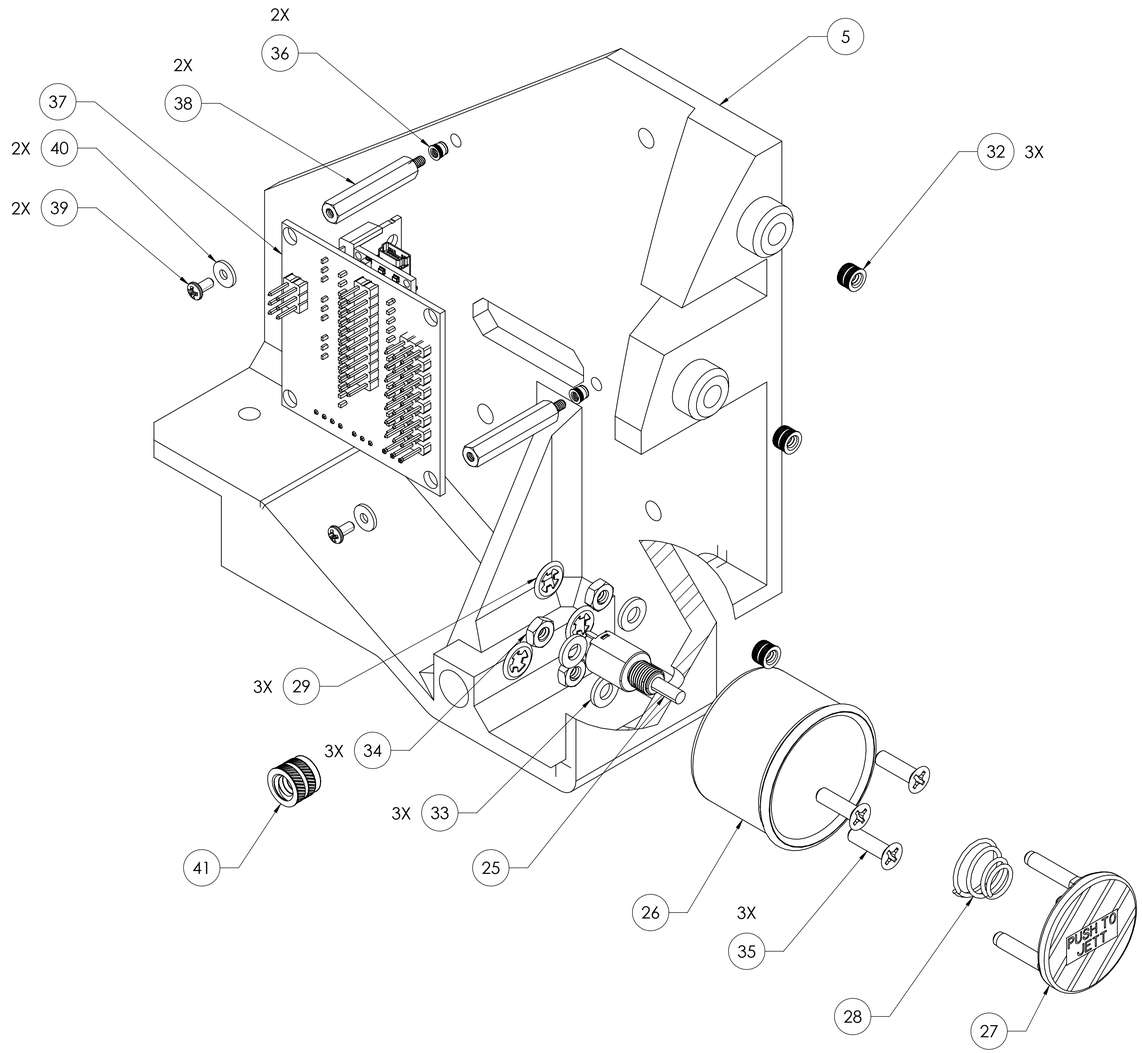

OPEN HORNET
https://www.OpenHornet.com

SIZE	DWG NO.	REV.
D	OH1A2A	-
SCALE NONE		SHEET 4 OF 4

BY NC SA