NOTES: (UNLESS OTHERWISE SPECIFIED)

1. SPECIFICATIONS AND DOCUMENTS:
   1.1. PANEL CONSTRUCTION SHALL BE IAW OH-SPEC-001, PANEL TYPE A, METHOD 1.
   1.2. ELECTRICAL CONNECTIONS SHALL BE IAW OH-INTERCONNECT.

2. ALL ITEMS NOT EXPLICITLY DEFINED IN THIS DRAWING ARE DEFINED BY THE MASTER CAD MODELS. ALL DIMENSIONS NOT DEFINED ON THIS DRAWING ARE CONTAINED WITHIN THE FOLLOWING INTERMEDIATE FILES:
   2.1. FLAT PARTS: <MATERIAL>_<MATERIAL COLOR, IF APPLICABLE>_ <THICKNESS, IN DECIMAL INCHES>_<PN>_ <REV>.v<VERSION NUMBER OF MODEL>.DXF
   2.2. FDM 3D PRINTED PARTS: FDM_<PN>_<REV>.v<VERSION # OF MODEL>.STL
   2.3. RESIN 3D PRINTED PARTS: RESIN_<PN>_<REV>.v<VERSION # OF MODEL>.STL

3. FINISH FN 1, 3, 5, 10, 13 & 23 IAW FED-STD-595, FS37038, BLACK. BOND TO ASSEMBLED FN 11 & 12 WITH A SPARING AMOUNT OF HMA OR CA.

4. MAKE FN 2, 4 & 6 FROM GREEN TRANSLUCENT ACRYLIC. BOND TO INSIDE OF RESPECTIVE BEZELS WITH A SPARING AMOUNT OF HMA OR CA .

5. MAKE SQUARE AND ROUND BUTTONS FROM TRANSLUCENT OR TRANSPARENT RESIN AND PAINT WHITE TO MAXIMIZE LIGHT TRANSMISSIBILITY. FINISH BUTTON BODY EXTERIOR IAW FED-STD-595, FS37038, BLACK WITH LEGENDS BEING FS37875, INSIGNIA WHITE.

REVISION HISTORY

REV	DESCRIPTION	DATE	APPROVED
-	INITIAL RELEASE	4/7/2023	

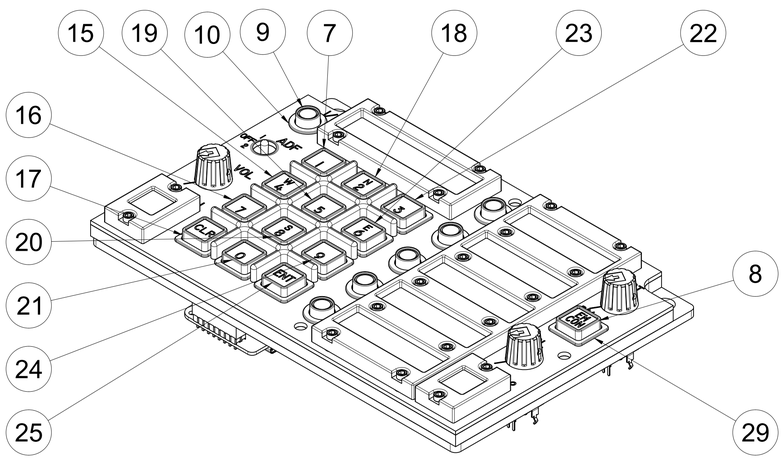

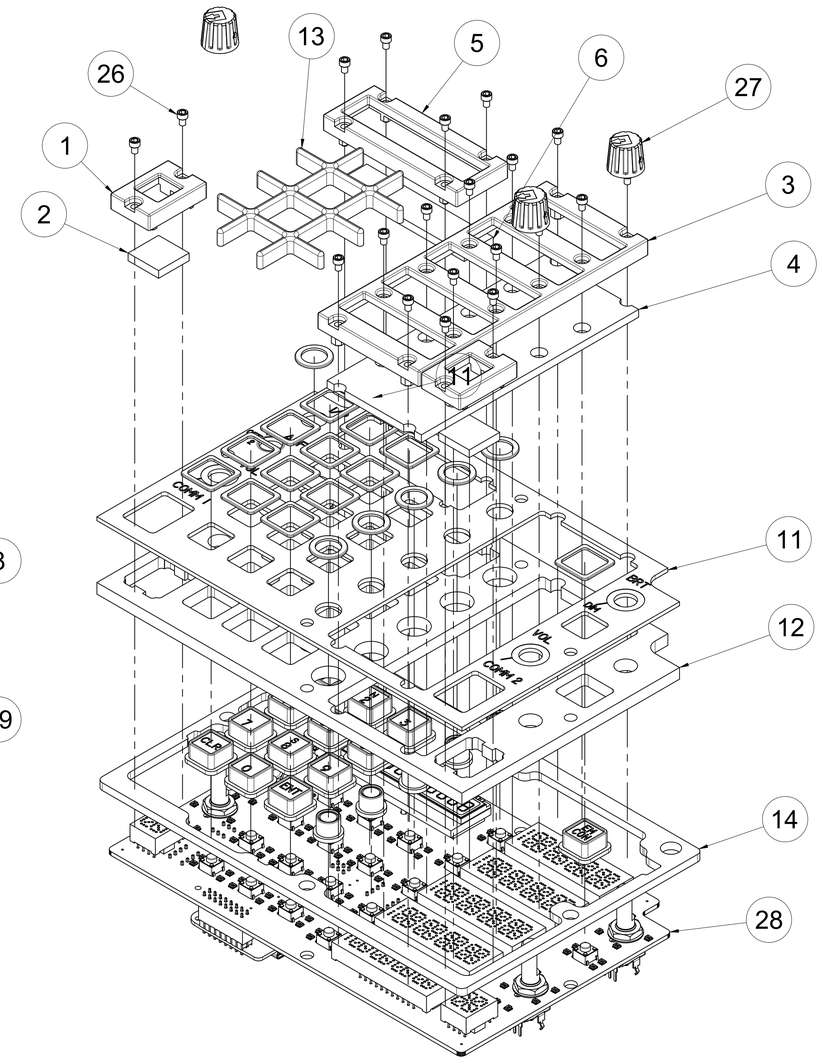

-100 ASSY

ITEM	QTY	PART NUMBER	DESCRIPTION	MATERIAL
29	13	OH1A8A1-111	SQUARE BUTTON TRIM	RESN
28	1	OH1A8A1-200	ASSY, PCB, UFC_MAIN	
27	3	OHC0003-A-012FGB3	ASSY, KNOB, GREY, .25 D-SHAFT	
26	20	96006A231	SHCS, #2-56 X .125, 18-8, BLK	SS
25	1	OH1A8A1-128	UFC SQUARE BUTTON, ENT	RESN
24	1	OH1A8A1-127	UFC SQUARE BUTTON, 9	RESN
23	1	OH1A8A1-126	UFC SQUARE BUTTON, 6	RESN
22	1	OH1A8A1-125	UFC SQUARE BUTTON, 3	RESN
21	1	OH1A8A1-124	UFC SQUARE BUTTON, 0	RESN
20	1	OH1A8A1-123	UFC SQUARE BUTTON, 8	RESN
19	1	OH1A8A1-122	UFC SQUARE BUTTON, 5	RESN
18	1	OH1A8A1-121	UFC SQUARE BUTTON, 2	RESN
17	1	OH1A8A1-120	UFC SQUARE BUTTON, CLR	RESN
16	1	OH1A8A1-119	UFC SQUARE BUTTON, 7	RESN
15	1	OH1A8A1-118	UFC SQUARE BUTTON, 4	RESN
14	1	OH1A8A1-117	UFC BACKPLATE	ACRL
13	1	OH1A8A1-116	UFC FINGER GUARD	RESN
12	1	OH1A8A1-115	UFC INNER SPACER PLATE	ACRL
11	1	OH1A8A1-114	UFC LEGEND PLATE	RMRK
10	6	OH1A8A1-113	UFC ROUND BUTTON GUARD	RESN
9	6	OH1A8A1-112	UFC ROUND BUTTON	RESN
8	1	OH1A8A1-110	UFC SQUARE BUTTON, EM CON	RESN
7	1	OH1A8A1-109	UFC SQUARE BUTTON, 1	RESN
6	1	OH1A8A1-106	UFC SCRATCHPAD BEZEL GUARD	ACRL
5	1	OH1A8A1-105	UFC SCRATCHPAD BEZEL	PETG
4	1	OH1A8A1-104	UFC OPT BEZEL GUARD	ACRL
3	1	OH1A8A1-103	UFC OPT BEZEL	PETG
2	2	OH1A8A1-102	UFC COMM BEZEL GUARD	ACRL
1	2	OH1A8A1-101	UFC COMM BEZEL	PETG

PARTS LIST

UNLESS OTHERWISE SPECIFIED:

DIMENSIONS ARE IN INCHES.

DUAL DIMENSIONS ARE IN MILIMETERS AND ENCLOSED IN SQUARE BRACKETS.

INTERPRET DRAWING IAW ASME Y14.100-2017.

INTERPRET DIM AND TOL IAW ASME Y14.5-2009.

REMOVE ALL BURRS AND SHARP EDGES TO .05 MAX.

DIMENSIONS APPLY BEFORE FINISH.

UOS INCH TOLERANCES ARE:

DECIMALS:
.X ± .1
.XX ± .03
.XXX ± .010

ANGLES:
MACHINED ± .5°
LOCATING ± .5°
FORMED ± 2°
CHAMFERS ± 5°

DRILLED HOLE DIAMETERS:
.0135 - .125: +.004/-.001
.126 - .250: +.005/-.001
.251 - .500: +.006/-.001
.501 - .750: +.008/-.001
.751 - 1.000: +.010/-.001
1.001 - 2.000: +.012/-.001

OPEN HORNET
https://www.OpenHornet.com

TITLE
ASSY, UFC PANEL V5

UPPER INSTRUMENT PANEL

DESIGNED	J. STEENSEN	04/07/2023
CHECKED		
DRAWN	J. STEENSEN	04/07/2023

CC BY NC SA

SIZE D | DWG NO OH1A8A1-100 | REV -

SCALE 1:1 | DO NOT SCALE DWG | SHEET 1/1