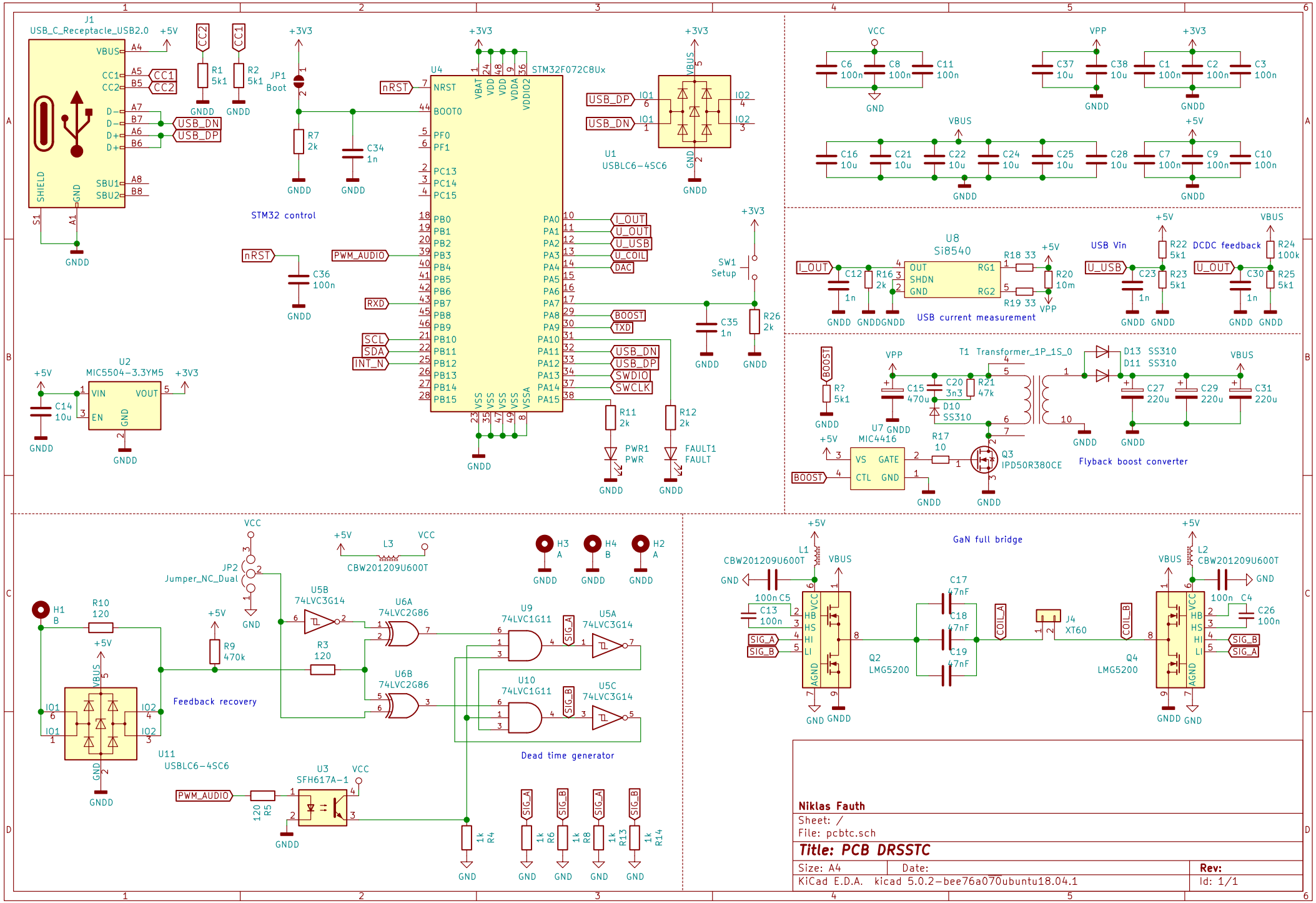
J1
USB_C_Receptacle_USB2.0
+5V
VBUS
CC1
CC2
D-
D+
SHIELD
GND
SBU1
SBU2
USB_DN
USB_DP
R1 5k1
R2 5k1
JP1 Boot
+3V3
R7 2k
C34 1n
GNDD
U4
STM32F072C8Ux
NRST
BOOT0
PF0
PF1
PC13
PC14
PC15
PB0
PB1
PB2
PB3
PB4
PB5
PB6
PB7
PB8
PB9
PB10
PB11
PB12
PB13
PB14
PB15
PA0
PA1
PA2
PA3
PA4
PA5
PA6
PA7
PA8
PA9
PA10
PA11
PA12
PA13
PA14
PA15
VBAT
VDD
VDDA
VDDIO2
VSS
VSSA
STM32 control
nRST
PWM_AUDIO
RXD
SCL
SDA
INT_N
I_OUT
U_OUT
U_USB
U_COIL
DAC
BOOST
TXD
SWDIO
SWCLK
C36 100n
SW1 Setup
C35 1n
R26 2k
R11 2k
R12 2k
PWR1 PWR
FAULT1 FAULT
U1
USBLC6-4SC6
IO1
IO2
U2
MIC5504-3.3YM5
VIN
VOUT
EN
C14 10u
+3V3
VCC
C6 100n
C8 100n
C11 100n
VPP
C37 10u
C38 10u
C1 100n
C2 100n
C3 100n
C16 10u
C21 10u
C22 10u
C24 10u
C25 10u
C28 10u
C7 100n
C9 100n
C10 100n
U8
Si8540
OUT
SHDN
RG1
RG2
R18 33
R19 33
R20 10m
C12 1n
R16 3 2k
USB current measurement
USB Vin
R22 5k1
R23 5k1
C23 1n
DCDC feedback
R24 100k
R25 5k1
C30 1n
BOOST
R? 5k1
C15 470u
C20 3n3
R21 47k
D10 SS310
T1 Transformer_1P_1S_0
D13 SS310
D11 SS310
C27 220u
C29 220u
C31 220u
U7 MIC4416
VS
GATE
CTL
R17 10
Q3 IPD50R380CE
Flyback boost converter
H1 B
R10 120
JP2 Jumper_NC_Dual
L3 CBW201209U600T
H3 A
H4 B
H2 A
R9 470k
Feedback recovery
U5B 74LVC3G14
U6A 74LVC2G86
U6B 74LVC2G86
R3 120
U9 74LVC1G11
U10 74LVC1G11
U5A 74LVC3G14
U5C 74LVC3G14
SIG_A
SIG_B
Dead time generator
U11
USBLC6-4SC6
U3 SFH617A-1
PWM_AUDIO
120 R5
1k R4
1k R6
1k R8
1k R13
1k R14
GaN full bridge
L1 CBW201209U600T
L2 CBW201209U600T
C13 100n
C5 100n
C4 100n
C26 100n
HB
HS
HI
LI
VCC
AGND
Q2 LMG5200
Q4 LMG5200
C17 47nF
C18 47nF
C19 47nF
COIL_A
COIL_B
J4 XT60
Niklas Fauth
Sheet: /
File: pcbtc.sch
Title: PCB DRSSTC
Size: A4
Date:
Rev:
KiCad E.D.A. kicad 5.0.2-bee76a070ubuntu18.04.1
Id: 1/1