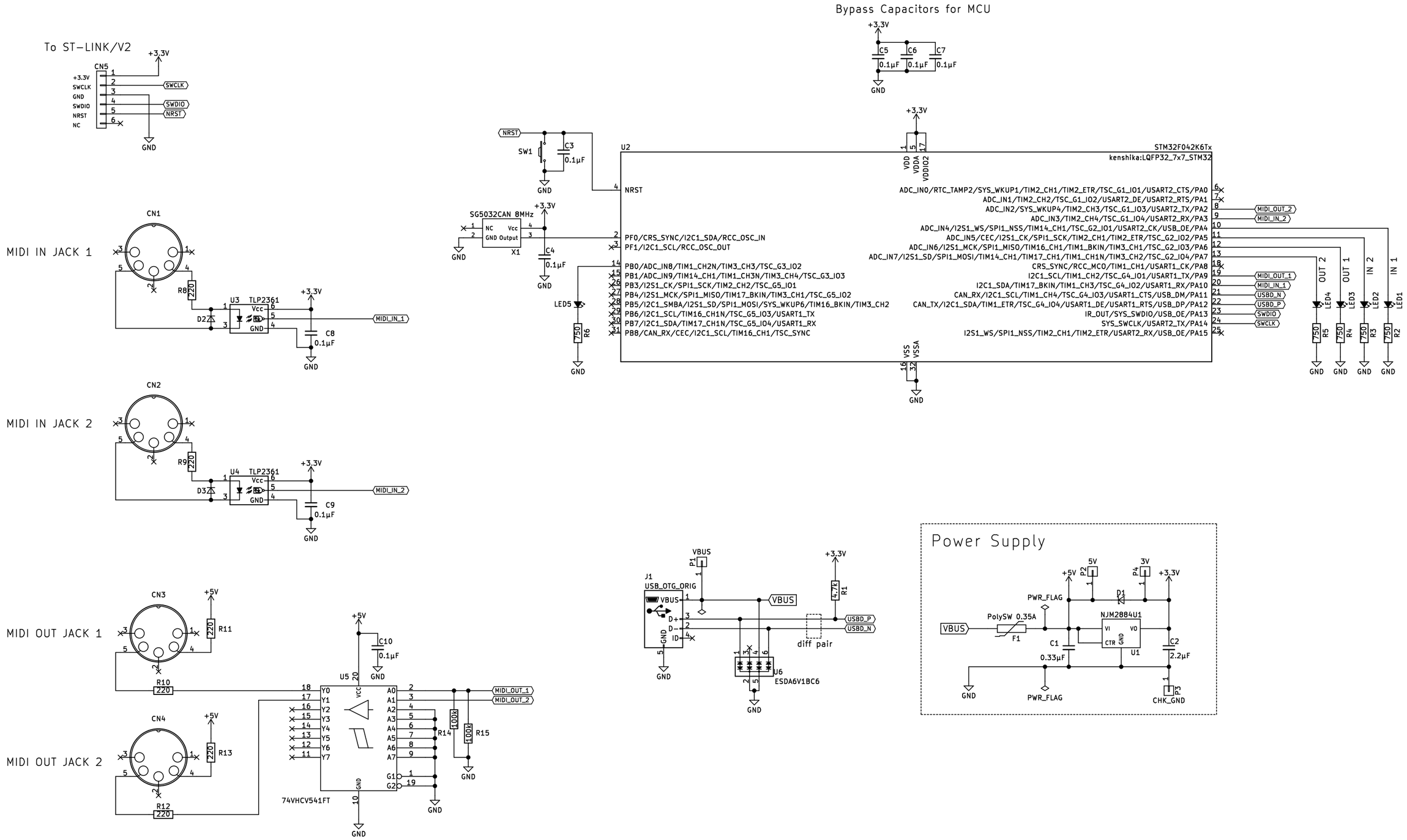

(c)keshikan
http://www.keshikan.net
twitter/@keshinomi_88pro

"CureMIDI" USB-MIDI Interface with STM32	Sheet: 1/1
Date: 2018-07-08 (Rev:B1)	Tool: KiCad E.D.A. kicad 4.0.7