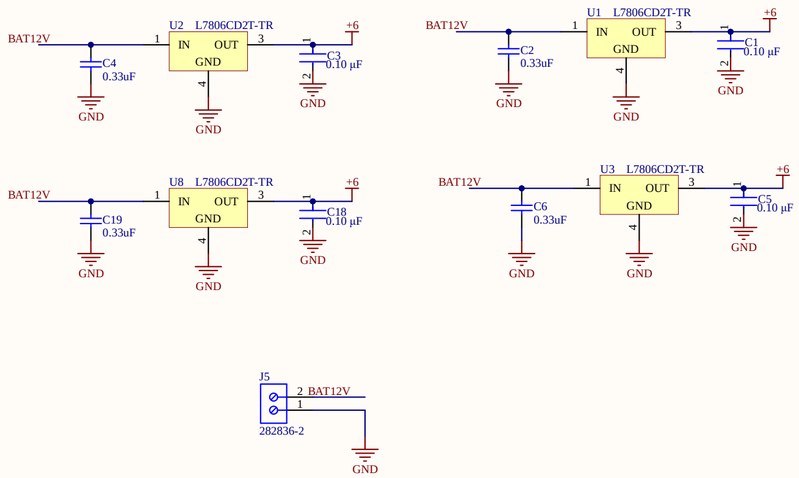

Title		
Size A	Number	Revision
Date: 7/20/2020		Sheet of
File: C:\Users\..\01_powersupply.SchDoc		Drawn By:

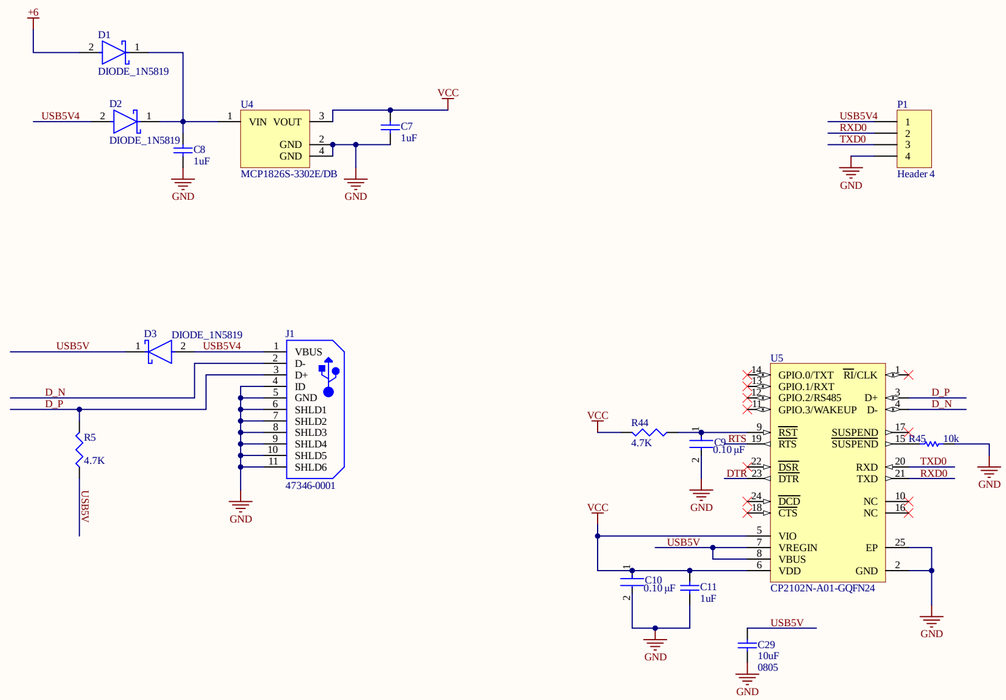

Title *			
Size: Letter	Number:*	Revision:*	
Date: 7/20/2020	Time: 9:39:52 PM	Sheet * of *	
File: C:\Users\yuanz\Documents\eedesgin\Antenna_base\02_USB2UART.SchDoc			

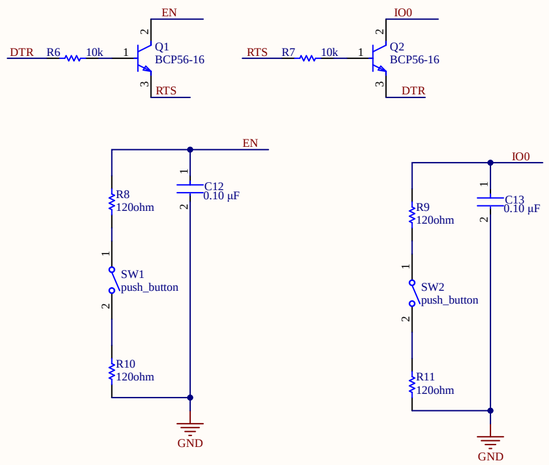

Title		
Size A	Number	Revision
Date: 7/20/2020	Sheet of	
File: C:\Users\..\03_pushswitch.SchDoc	Drawn By:	

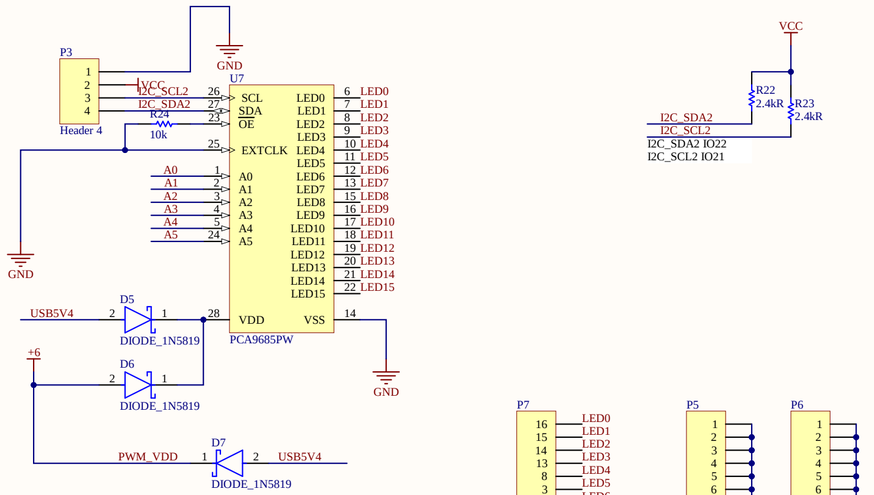

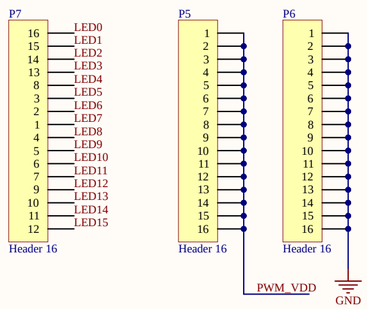

Title		
Size A	Number	Revision
Date: 7/20/2020	Sheet of	
File: C:\Users\..\05_PWMdriver.SchDoc	Drawn By:	

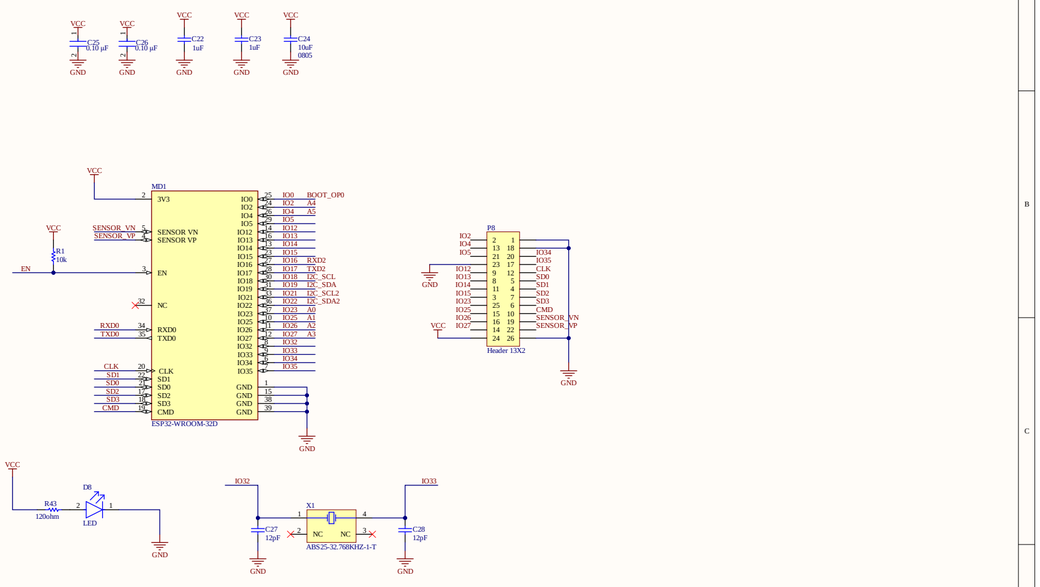

Title *			
Size: A3	Number: *	Revision: *	
Date: 7/20/2020	Time: 9:39:53 PM	Sheet * of *	
File: C:\Users\yuanz\Documents\eedesgin\Antenna_base\08_CoreBoard.SchDoc			

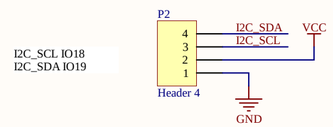

Title		
Size A	Number	Revision
Date: 7/20/2020	Sheet of	
File: C:\Users\..\10_IMU_BREAKOUT.SchDoc	Drawn By:	

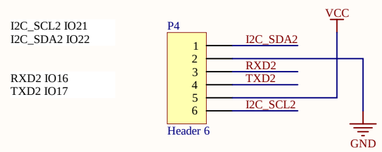

Title		
Size A	Number	Revision
Date: 7/20/2020	Sheet of	
File: C:\Users\..\11_GPS_BREAKOUT.SchDoc	Drawn By:	

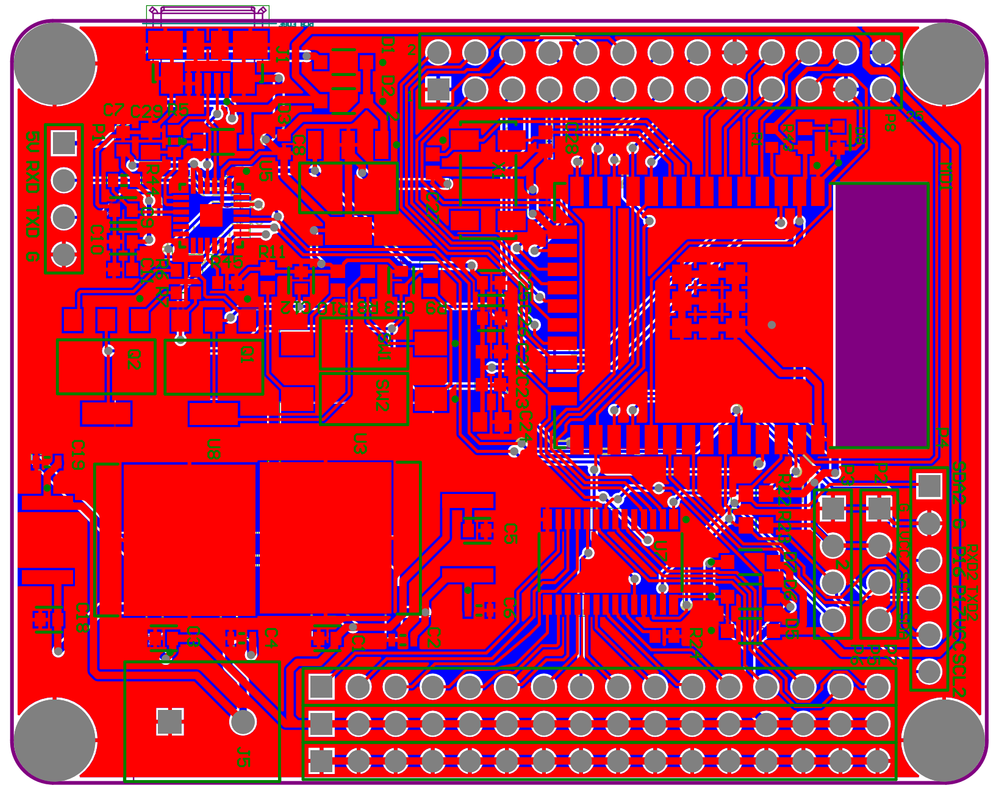
RU RXD TXD 6
GND
GND
GND