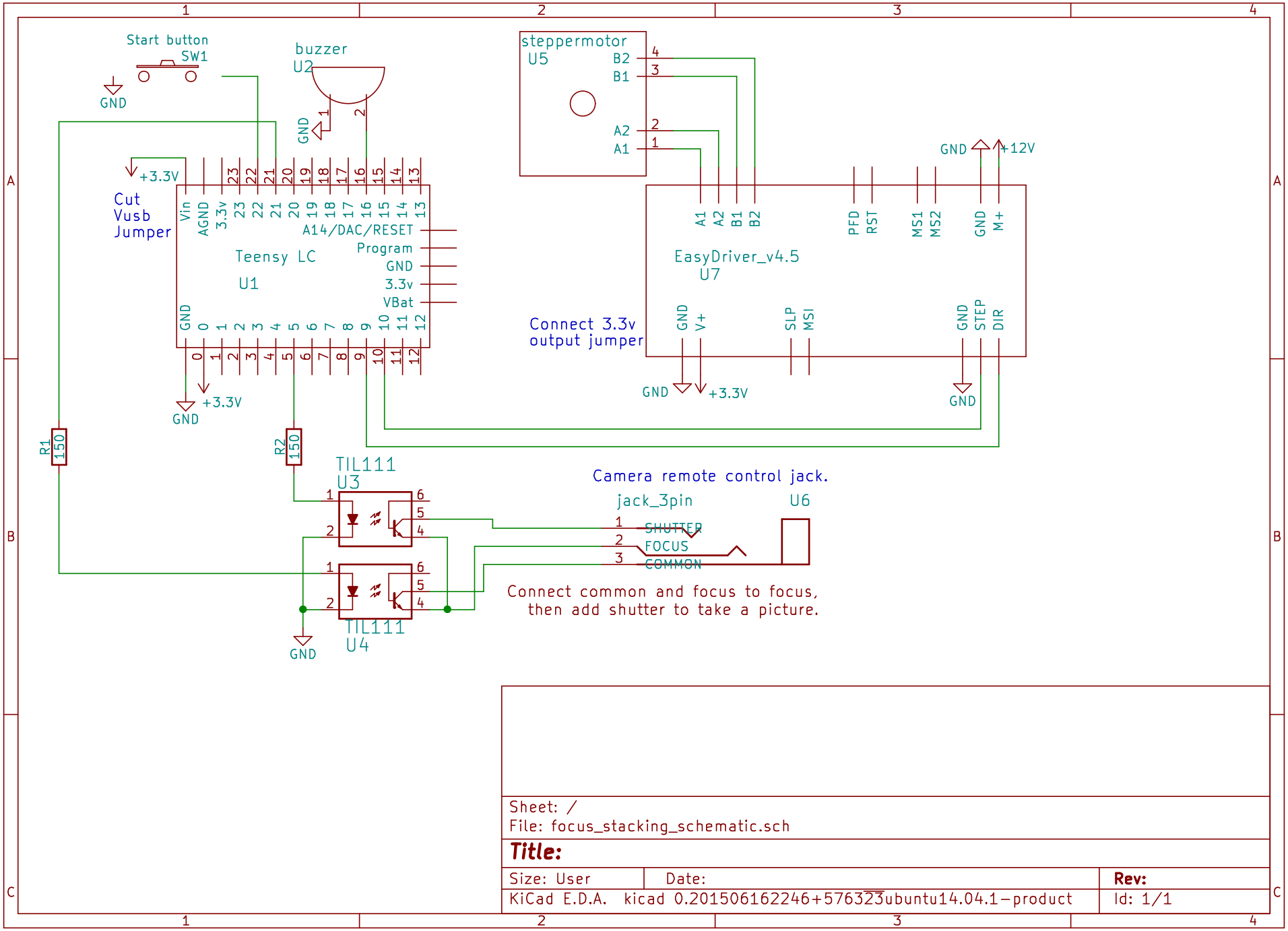

Sheet: /
File: focus_stacking_schematic.sch

Title:

Size: User	Date:	Rev:
KiCad E.D.A. kicad 0.201506162246+576323ubuntu14.04.1-product		Id: 1/1