Minimal Structured Logging for Autonomous Vehicles (AVs)

Date: 09/18/2019

Prepared by: Robert Keelan
Email: rkeelan@argo.ai

Agenda

- AV Debug Log Users and Requirements
- High Level Picture of “Ideal” Debug Log System
- Debug Log System Implementation in C++17
    - C++20 Improvements
- Error Handling Integration

Debug Logs and Autonomous Vehicles

- Debug Log
  - A record of events that occurs during the execution of a program
- Useful tool to help determine what has happened on a vehicle.
  - Vehicle Operators
  - Triage Engineers
  - Developers
  - Cloud Tooling

Sample Log Statement Content	
Field	**Sample Value**
Filename	Task.cc
Function Name	foo()
Line Number	107
Semantic Level	ERROR
Timestamp	5678.987
Payload	Tried to access index 7 on vector of size 6

Logging Paradigms

Logging Paradigms	
Text Logging	**Structured Logging**
“5678.987 [ERROR] Task.cc:107 foo() Tried to access index 7 on vector of size 6”	{ “filename": ”Task.cc”, “function": ”foo()”, “line": 107, “level": ”ERROR”, “timestamp": 5678.987 “payload": ”Tried to access index 7 on vector of size 6” }

Logging Paradigms

Logging Paradigms	
Text Logging	**Structured Logging**
“5678.987 [ERROR] Task.cc:107 foo() Tried to access index 7 on vector of size 6”	{ “filename": ”Task.cc”, “function": ”foo()”, 107, : ”ERROR”, tamp": 5678.987 ad": ”Tried to access index 7 on vector of size 6”

```
5678.987 [INFO]  Task.cc:100 baz() Lorem ipsum dolor sit amet, consectetur ad
5679.987 [INFO]  Task.cc:100 baz() Lorem ipsum dolor sit amet, consectetur ad
5680.987 [INFO]  Task.cc:100 baz() Lorem ipsum dolor sit amet, consectetur ad
5681.987 [INFO]  Task.cc:100 baz() Lorem ipsum dolor sit amet, consectetur ad
5682.987 [INFO]  Task.cc:100 baz() Lorem ipsum dolor sit amet, consectetur ad
5683.987 [INFO]  Task.cc:100 baz() Lorem ipsum dolor sit amet, consectetur ad
5684.987 [INFO]  Task.cc:100 baz() Lorem ipsum dolor sit amet, consectetur ad
5685.987 [INFO]  Task.cc:100 baz() Lorem ipsum dolor sit amet, consectetur ad
5686.987 [ERROR] Task.cc:107 foo() Tried to access index 7 on vector of size 6
5687.987 [INFO]  Task.cc:100 baz() Lorem ipsum dolor sit amet, consectetur ad
5688.987 [INFO]  Task.cc:100 baz() Lorem ipsum dolor sit amet, consectetur ad
```

Logging Paradigms

Logging Paradigms	
Text Logging	**Structured Logging**
“5678.987 [ERROR] Task.cc:107 foo() Tried to access index 7 on vector of size 6”	{ “filename": ”Task.cc”, “function": ”foo()”, 107, : ”ERROR”, tamp": 5678.987 ad": ”Tried to access index 7 on vector of size 6”

```
5678.987 [INFO]  Task.cc:100 baz() Lorem ipsum dolor sit amet, consectetur ad
5679.987 [INFO]  Task.cc:100 baz() Lorem ipsum dolor sit amet, consectetur ad
5680.987 [INFO]  Task.cc:100 baz() Lorem ipsum dolor sit amet, consectetur ad
5681.987 [INFO]  Task.cc:100 baz() Lorem ipsum dolor sit amet, consectetur ad
5682.987 [INFO]  Task.cc:100 baz() Lorem ipsum dolor sit amet, consectetur ad
5683.987 [INFO]  Task.cc:100 baz() Lorem ipsum dolor sit amet, consectetur ad
5684.987 [INFO]  Task.cc:100 baz() Lorem ipsum dolor sit amet, consectetur ad
5685.987 [INFO]  Task.cc:100 baz() Lorem ipsum dolor sit amet, consectetur ad
5686.987 [ERROR] Task.cc:107 foo() Tried to access index 7 on vector of size 6
5687.987 [INFO]  Task.cc:100 baz() Lorem ipsum dolor sit amet, consectetur ad
5688.987 [INFO]  Task.cc:100 baz() Lorem ipsum dolor sit amet, consectetur ad
```

Logging Paradigms

Logging Paradigms	
Text Logging	**Structured Logging**

“5678.987 [ERROR] Task.cc:107 foo() Tried to access index 7 on vector of size 6”	{
	 “filename": ”Task.cc”,
	 “function": ”foo()”,
	 “line": 107,
	 “level": ”ERROR”,
	 “timestamp": 5678.987
	 “payload": ”Tried to access index 7 on vector of size 6”
	 }

Logging Paradigms

Logging Paradigms	
Text Logging	**Structured Logging**

“5678.987 [ERROR] Task.cc:107 foo() Tried to access index 7 on vector of size 6”
 	
“payload": {
“string”: “Invalid vector access”,
“index: 7,
“size: 6
}
	{
	“filename": ”Task.cc”,
	“function": ”foo()”,
	“line": 107,
	“level": ”ERROR”,
	“timestamp": 5678.987
	~~“payload": ”Tried to access index 7 on vector of size 6”~~
	}

“Ideal” Debug Log Interface

```
LOG_ERROR(“Tried to access index {{index}} on vector of size
          {{size}}.”, idx, siz);
```

- Macro for each debug log level
  - **macro vs. function**
- *std::format* / *{fmt}* compatible format string (mostly)
- **Still positional fields**

Text	Structured
“Tried to access element 7 on container of size 6.”	{ “format_string”:”Tried to access index {{}} on vector of size {{}}.” “index": 7, “size”:6 }

Metadata vs Instance Data

```
5678.987 [ERROR] Task.cc:107 foo() Tried to access index 1 on vector of size 0
5679.876 [ERROR] Task.cc:107 foo() Tried to access index 2 on vector of size 1
5680.765 [ERROR] Task.cc:107 foo() Tried to access index 3 on vector of size 2
5681.654 [ERROR] Task.cc:107 foo() Tried to access index 4 on vector of size 3
5682.543 [ERROR] Task.cc:107 foo() Tried to access index 5 on vector of size 4
5683.432 [ERROR] Task.cc:107 foo() Tried to access index 6 on vector of size 5
5684.321 [ERROR] Task.cc:107 foo() Tried to access index 7 on vector of size 6
5685.219 [ERROR] Task.cc:107 foo() Tried to access index 8 on vector of size 7
5686.198 [ERROR] Task.cc:107 foo() Tried to access index 9 on vector of size 8
5687.987 [ERROR] Task.cc:107 foo() Tried to access index 8 on vector of size 7
5688.876 [ERROR] Task.cc:107 foo() Tried to access index 7 on vector of size 6
5689.765 [ERROR] Task.cc:107 foo() Tried to access index 6 on vector of size 5
```

Metadata vs Instance Data

```
5678.987 [ERROR] Task.cc:107 foo() Tried to access index 1 on vector of size 0
5679.876 [ERROR] Task.cc:107 foo() Tried to access index 2 on vector of size 1
5680.765 [ERROR] Task.cc:107 foo() Tried to access index 3 on vector of size 2
5681.654 [ERROR] Task.cc:107 foo() Tried to access index 4 on vector of size 3
5682.543 [ERROR] Task.cc:107 foo() Tried to access index 5 on vector of size 4
5683.432 [ERROR] Task.cc:107 foo() Tried to access index 6 on vector of size 5
5684.321 [ERROR] Task.cc:107 foo() Tried to access index 7 on vector of size 6
5685.219 [ERROR] Task.cc:107 foo() Tried to access index 8 on vector of size 7
5686.198 [ERROR] Task.cc:107 foo() Tried to access index 9 on vector of size 8
5687.987 [ERROR] Task.cc:107 foo() Tried to access index 8 on vector of size 7
5688.876 [ERROR] Task.cc:107 foo() Tried to access index 7 on vector of size 6
5689.765 [ERROR] Task.cc:107 foo() Tried to access index 6 on vector of size 5
```

Metadata

Instance Data

“Ideal” AV Debug Logger

- Structured metadata
  - Logged once (per version)
- Instance Data
  - Metadata ID
  - Timestamp
  - Dynamic payload data
- Serialized instance data logged on vehicle
- Text based logs
  - Generated on the fly from instance and metadata

“Ideal” AV Debug Logger

- Structured metadata
  - Logged once (per version)
- Instance Data
  - Metadata ID
  - Timestamp
  - Dynamic payload data
- Serialized instance data logged on vehicle
- Text based logs
  - Generated on the fly from instance and metadata

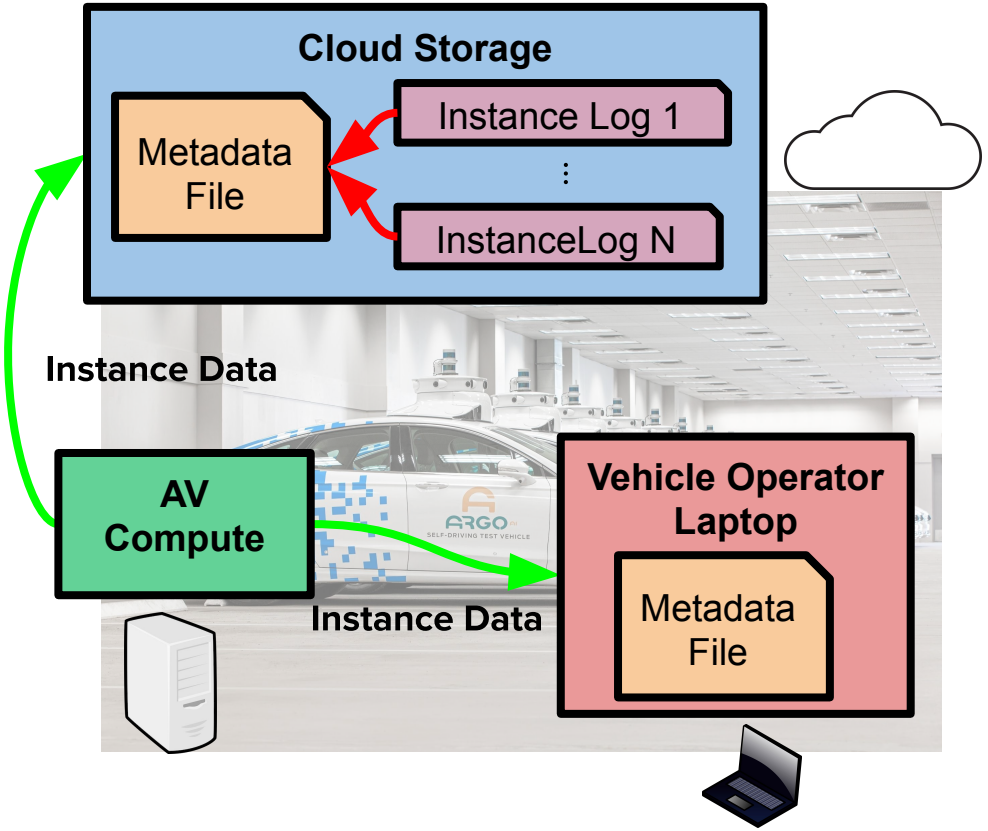

Metadata Aggregation

- Statically generate an intrusive singly linked list
- Unique ID assigned to every list element.
- Metadata written to a file.

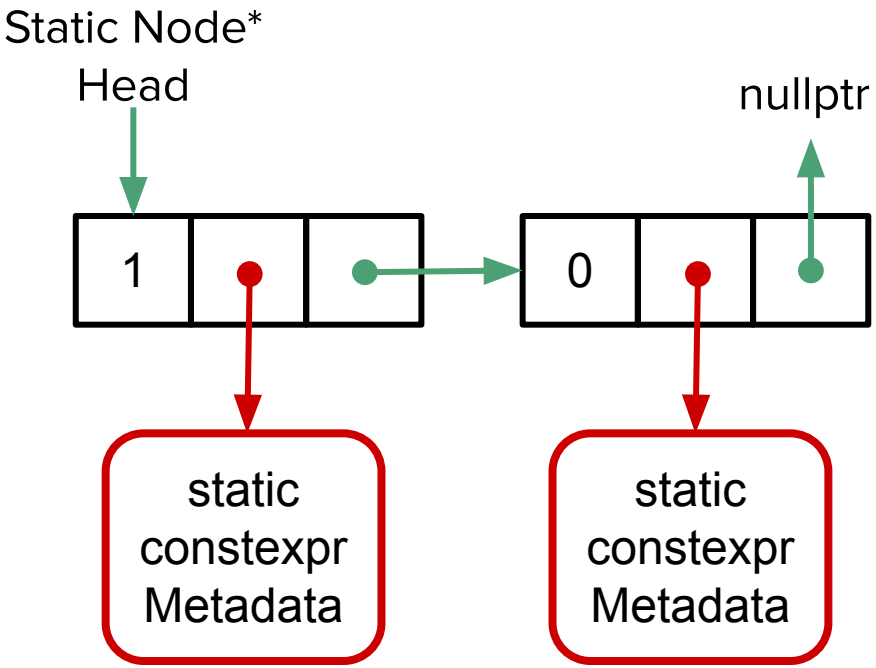

Debug Log Statement Contents

```
enum class Level;

struct LogMacroData {
  std::string_view file{};
  std::string_view function{};
  std::string_view fmt_str{};
  int32_t line{};
  Level level{};
};
```

```
struct LogStatementMetadata {
  LogMacroData macro_data{};
  TypeDescriptors descriptors{};
};
```

Debug Log Statement Contents

```
enum class Level;

struct LogMacroData {
  std::string_view file{};
  std::string_view function{};
  std::string_view fmt_str{};
  int32_t line{};
  Level level{};
};
```

```
struct LogStatementMetadata {
  LogMacroData macro_data{};
  TypeDescriptors descriptors{};
};
```

Metadata Aggregation: Log Macro

```
#define LOG_ERROR(format, ...)                                          \
do {                                                                    \
  static constexpr std::string_view anonymous_function{__FUNCTION__;} \
  struct {                                                              \
    constexpr LogMacroData operator()() const noexcept {                \
        return LogMacroData{format, __FILE__, anonymous_function,       \
                                    __LINE__, Level::ERROR};            \
    }                                                                   \
  } anonymous_meta_data;                                                \
  log<decltype(anonymous_meta_data)>(__VA_ARGS__);                      \
} while(false);
```

```
void foo() { LOG_ERROR("Tried to access index {{index}} on vector of
  size {{size}}.", idx, siz); }
```

Metadata Aggregation: Log Macro

```
#define LOG_ERROR(format, ...)                                          \
do {                                                                    \
  static constexpr std::string_view anonymous_function{__FUNCTION__;} \
  struct {                                                              \
    constexpr LogMacroData operator()() const noexcept {                \
        return LogMacroData{format, __FILE__, anonymous_function,       \
                                    __LINE__, Level::ERROR};            \
    }                                                                   \
  } anonymous_meta_data;                                                \
  log<decltype(anonymous_meta_data)>(__VA_ARGS__);                      \
} while(false);

void foo() { LOG_ERROR("Tried to access index {{index}} on vector of
  size {{size}}.", idx, siz); }
```

Metadata Aggregation: Log Macro

```
#define LOG_ERROR(format, ...)                                          \
do {                                                                    \
  static constexpr std::string_view anonymous_function{__FUNCTION__;} \
  struct {                                                              \
    constexpr LogMacroData operator()() const noexcept {                \
        return LogMacroData{format, __FILE__, anonymous_function,       \
                                    __LINE__, Level::ERROR};            \
    }                                                                   \
  } anonymous_meta_data;                                                \
  log<decltype(anonymous_meta_data)>(__VA_ARGS__);                      \
} while(false);

void foo() { LOG_ERROR("Tried to access index {{index}} on vector of
  size {{size}}.", idx, siz); }
```

Metadata Aggregation: Log Macro

```
#define LOG_ERROR(format, ...)                                          \
do {                                                                    \
  static constexpr std::string_view anonymous_function{__FUNCTION__;} \
  struct {                                                              \
    constexpr LogMacroData operator()() const noexcept {                \
        return LogMacroData{format, __FILE__, anonymous_function,       \
                            __LINE__, Level::ERROR};                    \
    }                                                                   \
  } anonymous_meta_data;                                                \
  log<decltype(anonymous_meta_data)>(__VA_ARGS__);                      \
} while(false);

void foo() { LOG_ERROR("Tried to access index {{index}} on vector of
  size {{size}}.", idx, siz); }
```

Metadata Aggregation: Log Macro

```
#define LOG_ERROR(format, ...)                                          \
do {                                                                    \
  static constexpr std::string_view anonymous_function{__FUNCTION__;}  \
  struct {                                                              \
    constexpr LogMacroData operator()() const noexcept {                \
        return LogMacroData{format, __FILE__, anonymous_function,       \
                                    __LINE__, Level::ERROR};            \
    }                                                                   \
  } anonymous_meta_data;                                                \
  log<decltype(anonymous_meta_data)>(__VA_ARGS__);                      \
} while(false);

void foo() { LOG_ERROR("Tried to access index {{index}} on vector of
  size {{size}}.", idx, siz); }
```

Metadata Aggregation: Log Macro

```
#define LOG_ERROR(format, ...)                                          \
do {                                                                    \
  static constexpr std::string_view anonymous_function{__FUNCTION__;} \
  struct {                                                              \
    constexpr LogMacroData operator()() const noexcept {                \
        return LogMacroData{format, __FILE__, anonymous_function,       \
                                    __LINE__, Level::ERROR};            \
    }                                                                   \
  } anonymous_meta_data;                                                \
  log<decltype(anonymous_meta_data)>(__VA_ARGS__);                      \
} while(false);

void foo() { LOG_ERROR("Tried to access index {{index}} on vector of
  size {{size}}.", idx, siz); }
```

Metadata Aggregation: Log Macro C++20

```
template<unsigned N>
struct FixedString {
    constexpr FixedString(char const* s);
    char buf[N + 1]{};
};
template<unsigned N>
FixedString(char const (&)[N]) -> FixedString<N - 1>;

template<FixedString fixed_string>
void log();

void foo() { log<__FUNCTION__>(); }
```

Metadata Aggregation: Log Macro C++20

```
template<unsigned N>
struct FixedString {
    constexpr FixedString(char const* s);
    char buf[N + 1]{};
};
template<unsigned N>
FixedString(char const (&)[N]) -> FixedString<N - 1>;

template<FixedString fixed_string>
void log();

void foo() { log<__FUNCTION__>(); }
```

Metadata Aggregation: Log Macro C++20

```
template<unsigned N>
struct FixedString {
    constexpr FixedString(char const* s);
    char buf[N + 1]{};
};
template<unsigned N>
FixedString(char const (&)[N]) -> FixedString<N - 1>;

template<FixedString fixed_string>
void log();

void foo() { log<__FUNCTION__>(); }
```

Metadata Aggregation: Linked List

```
int32_t gen_id() {
  static int32_t id{-1};
  ++id;
  return id;
}

struct LogDataNode;

LogDataNode*& log_data_head() {
  static LogDataNode* head{nullptr};
  return head;
}
```

```
struct LogDataNode {
  LogDataNode(DebugLogMetaData const* d) :
        id{gen_id()}, data{d}
  {
    auto& head = log_data_head();
    next = std::exchange(head, this);
  }

  int32_t id{};
  LogDataNode const* next;
  DebugLogMetaData const* data;
};
```

Metadata Aggregation: Linked List

```
int32_t gen_id() {
  static int32_t id{-1};
  ++id;
  return id;
}

struct LogDataNode;

LogDataNode*& log_data_head() {
  static LogDataNode* head{nullptr};
  return head;
}
```

```
struct LogDataNode {
  LogDataNode(DebugLogMetaData const* d) :
        id{gen_id()}, data{d}
  {
    auto& head = log_data_head();
    next = std::exchange(head, this);
  }

  int32_t id{};
  LogDataNode const* next;
  DebugLogMetaData const* data;
};
```

Metadata Aggregation: Linked List

```
int32_t gen_id() {
  static int32_t id{-1};
  ++id;
  return id;
}

struct LogDataNode;

LogDataNode*& log_data_head() {
  static LogDataNode* head{nullptr};
  return head;
}
```

```
struct LogDataNode {
  LogDataNode(DebugLogMetaData const* d) :
        id{gen_id()}, data{d}
  {
    auto& head = log_data_head();
    next = std::exchange(head, this);
  }

  int32_t id{};
  LogDataNode const* next;
  DebugLogMetaData const* data;
};
```

Metadata Aggregation: Linked List

```
int32_t gen_id() {
  static int32_t id{-1};
  ++id;
  return id;
}

struct LogDataNode;

LogDataNode*& log_data_head() {
  static LogDataNode* head{nullptr};
  return head;
}
```

```
struct LogDataNode {
  LogDataNode(DebugLogMetaData const* d) :
      id{gen_id()}, data{d}
  {
    auto& head = log_data_head();
    next = std::exchange(head, this);
  }

  int32_t id{};
  LogDataNode const* next;
  DebugLogMetaData const* data;
};
```

Metadata Aggregation: Linked List

```
int32_t gen_id() {
  static int32_t id{-1};
  ++id;
  return id;
}

struct LogDataNode;

LogDataNode*& log_data_head() {
  static LogDataNode* head{nullptr};
  return head;
}
```

```
struct LogDataNode {
  LogDataNode(DebugLogMetaData const* d) :
        id{gen_id()}, data{d}
  {
    auto& head = log_data_head();
    next = std::exchange(head, this);
  }

  int32_t id{};
  LogDataNode const* next;
  DebugLogMetaData const* data;
};
```

Metadata Aggregation: Linked List

```
int32_t gen_id() {
  static int32_t id{-1};
  ++id;
  return id;
}

struct LogDataNode;

LogDataNode*& log_data_head() {
  static LogDataNode* head{nullptr};
  return head;
}
```

```
struct LogDataNode {
  LogDataNode(DebugLogMetaData const* d) :
        id{gen_id()}, data{d}
  {
    auto& head = log_data_head();
    next = std::exchange(head, this);
  }

  int32_t id{};
  LogDataNode const* next;
  DebugLogMetaData const* data;
};
```

Metadata Aggregation: Construction

```
template <class F, class… Args>
LogStatementMetadata const* get_meta_data_ptr();

template <class F, class… Args>
inline MetaDataNode meta_data_node{get_meta_data_ptr()};

template <class F, class ...Args>
void log(Args const& ...args) {
  serialize(meta_data_node<F, Args...>.id, args…);
};
```

Metadata Aggregation: Construction

```
template <class F, class… Args>
LogStatementMetadata const* get_meta_data_ptr();

template <class F, class… Args>
inline MetaDataNode meta_data_node{get_meta_data_ptr()};

template <class F, class ...Args>
void log(Args const& ...args) {
  serialize(meta_data_node<F, Args...>.id, args…);
};
```

Metadata Aggregation: Construction

```
template <class F, class… Args>
LogStatementMetadata const* get_meta_data_ptr();

template <class F, class… Args>
inline MetaDataNode meta_data_node{get_meta_data_ptr()};

template <class F, class ...Args>
void log(Args const& ...args) {
  serialize(meta_data_node<F, Args...>.id, args…);
};
```

Metadata Aggregation: Construction

```
template <class F, class… Args>
LogStatementMetadata const* get_meta_data_ptr();

template <class F, class… Args>
inline MetaDataNode meta_data_node{get_meta_data_ptr()};

template <class F, class ...Args>
void log(Args const& ...args) {
  serialize(meta_data_node<F, Args...>.id, args…);
};
```

Metadata Aggregation: TypeDescriptor

```
struct Enum {
  Span<std::pair<int, std::string_view>> table;
};
struct Int{};
struct Float{};

using TypeDescriptor = std::variant<Int, Float, Enum/*,...*/>;
using TypeDescriptors = Span<TypeDescriptor>;

template <class T>
struct GetTypeDescriptor;
```

Metadata Aggregation: TypeDescriptor

```
struct Enum {
  Span<std::pair<int, std::string_view>> table;
};
struct Int{};
struct Float{};

using TypeDescriptor = std::variant<Int, Float, Enum/*,...*/>;
using TypeDescriptors = Span<TypeDescriptor>;

template <class T>
struct GetTypeDescriptor;
```

Metadata Aggregation: TypeDescriptor

```
struct Enum {
  Span<std::pair<int, std::string_view>> table;
};
struct Int{};
struct Float{};

using TypeDescriptor = std::variant<Int, Float, Enum/*,...*/>;
using TypeDescriptors = Span<TypeDescriptor>;

template <class T>
struct GetTypeDescriptor;
```

Metadata Aggregation: TypeDescriptor

```
struct Enum {
  Span<std::pair<int, std::string_view>> table;
};
struct Int{};
struct Float{};

using TypeDescriptor = std::variant<Int, Float, Enum/*,...*/>;
using TypeDescriptors = Span<TypeDescriptor>;

template <class T>
struct GetTypeDescriptor;
```

Metadata Aggregation: TypeDescriptor

```
struct Enum {
  Span<std::pair<int, std::string_view>> table;
};
struct Int{};
struct Float{};

using TypeDescriptor = std::variant<Int, Float, Enum/*,...*/>;
using TypeDescriptors = Span<TypeDescriptor>;
```

```
template <class T>
struct GetTypeDescriptor;
```

Metadata Aggregation: Metadata Generation

```
template <>
struct GetTypeDescriptor<int> {
  static constexpr TypeDescriptor value{Int{}};
};
```

```
template <class F, class… Args>
LogStatementMetadata const* get_meta_data_ptr() {
  static constexpr std::array
    type_descriptors{GetTypeDescriptor<Args>::value...};
  static constexpr LogStatementMetadata
    meta_data{F{}(), Span{type_descriptors}};
  return &meta_data;
}
```

Metadata Aggregation: Metadata Generation

```
template <>
struct GetTypeDescriptor<int> {
  static constexpr TypeDescriptor value{Int{}};
};
```

```
template <class F, class… Args>
LogStatementMetadata const* get_meta_data_ptr() {
  static constexpr std::array
    type_descriptors{GetTypeDescriptor<Args>::value...};
  static constexpr LogStatementMetadata
    meta_data{F{}(), Span{type_descriptors}};
  return &meta_data;
}
```

Metadata Aggregation: Metadata Generation

```
template <>
struct GetTypeDescriptor<int> {
  static constexpr TypeDescriptor value{Int{}};
};

template <class F, class… Args>
LogStatementMetadata const* get_meta_data_ptr() {
  static constexpr std::array
    type_descriptors{GetTypeDescriptor<Args>::value...};
  static constexpr LogStatementMetadata
    meta_data{F{}(), Span{type_descriptors}};
  return &meta_data;
}
```

Metadata Aggregation: Metadata Generation

```
template <>
struct GetTypeDescriptor<int> {
  static constexpr TypeDescriptor value{Int{}};
};

template <class F, class… Args>
LogStatementMetadata const* get_meta_data_ptr() {
  static constexpr std::array
    type_descriptors{GetTypeDescriptor<Args>::value...};
  static constexpr LogStatementMetadata
    meta_data{F{}(), Span{type_descriptors}};
  return &meta_data;
}
```

Metadata Aggregation: Metadata Generation

```
template <>
struct GetTypeDescriptor<int> {
  static constexpr TypeDescriptor value{Int{}};
};

template <class F, class… Args>
LogStatementMetadata const* get_meta_data_ptr() {
  static constexpr std::array
    type_descriptors{GetTypeDescriptor<Args>::value...};
  static constexpr LogStatementMetadata
    meta_data{F{}(), Span{type_descriptors}};
  return &meta_data;
}
```

Metadata Aggregation: Metadata Generation

```
template <>
struct GetTypeDescriptor<int> {
  static constexpr TypeDescriptor value{Int{}};
};

template <class F, class… Args>
LogStatementMetadata const* get_meta_data_ptr() {
  static constexpr std::array
    type_descriptors{GetTypeDescriptor<Args>::value...};
  static constexpr LogStatementMetadata
    meta_data{F{}(), Span{type_descriptors}};
  return &meta_data;
}
```

Metadata Aggregation: Metadata Generation

```
template <>
struct GetTypeDescriptor<int> {
  static constexpr TypeDescriptor value{Int{}};
};

template <class F, class… Args>
LogStatementMetadata const* get_meta_data_ptr() {
  static constexpr std::array
    type_descriptors{GetTypeDescriptor<Args>::value...};
  static constexpr LogStatementMetadata
    meta_data{F{}(), Span{type_descriptors}};
  return &meta_data;
}
```

Metadata Aggregation: Metadata Generation C++ 20

```
struct Enum{
  std::vector<std::pair<int, std::string_view>> table;};
using TypeDescriptor = std::variant<Int, Float, Enum/*,...*/>;
using TypeDescriptors = std::vector<TypeDescriptor>;

template <class F, class… Args>
LogStatementMetadata const* get_meta_data_ptr() {
  static constexpr LogStatementMetadata
    meta_data{F{}(),
              std::vector{GetTypeDescriptor<Args>::value...}};
  return &meta_data;
}
```

- constexpr std::vector

Transporting Log Statements: Explanation<>

- Pointer to LogDataNode
  - ID
  - Metadata pointer
- Container of bytes
  - Serialized dynamic data

```
template <size_t size>
struct Explanation{
  LogDataNode* node{};
  std::array<std::byte, size> data{};
};
```

Transporting Log Statements: Usage

```
Expected<int32_t, Explanation<4U>> foo(int32_t y);
```

```
std::optional<int32_t> baz(int32_t y) {
  if(auto x = foo(y); result.has_value()) {
    return x.value(); }
  else {
    LOG_ERROR("baz failed due to error {error}",
              x.error()); }
  return std::nullopt;
}
```

Transporting Log Statements: Usage

```
Expected<int32_t, Explanation<4U>> foo(int32_t y);

std::optional<int32_t> baz(int32_t y) {
  if(auto x = foo(y); result.has_value()) {
    return x.value(); }
  else {
    LOG_ERROR("baz failed due to error {error}",
              x.error()); }
  return std::nullopt;
}
```

Transporting Log Statements: Usage

```
Expected<int32_t, Explanation<4U>> foo(int32_t y);

std::optional<int32_t> baz(int32_t y) {
  if(auto x = foo(y); result.has_value()) {
    return x.value(); }
  else {
    LOG_ERROR("baz failed due to error {error}",
              x.error()); }
  return std::nullopt;
}
```

Transporting Log Statements: Usage

```
Expected<int32_t, Explanation<4U>> foo(int32_t y);

std::optional<int32_t> baz(int32_t y) {
  if(auto x = foo(y); result.has_value()) {
    return x.value(); }
  else {
    LOG_ERROR("baz failed due to error {error}",
              x.error()); }
  return std::nullopt;
}
```

- **Client Decides when to log.**
- **Nesting creates traces.**

Conclusion

- Described a debug logger that:
  - Produces structured and text output
  - Separates meta and instance data for efficiency
- Implemented key pieces of the framework in C++17
  - Showed improvements in C++20
- Created a type that efficiently encodes and transports logging statements

Minimal Structured Logging for Autonomous Vehicles

Date: 09/18/2019

Prepared by: Robert Keelan
Email: rkeelan@argo.ai

Structured Payload: Dynamic Data

```
LOG_ERROR("Tried to access index {{index}} on vector of size
          {{size}}.", idx, siz);
```

- Description of each replacement field is contained in the metadata
- Replacement fields can just be serialized to an output archive
  - Archive could wrap a SPSC thread local queue

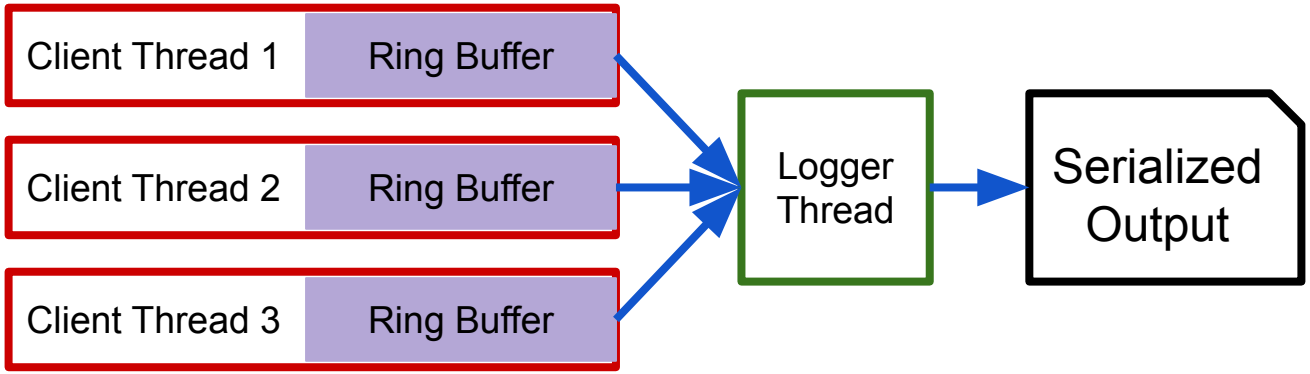

This Framework vs NanoLog

- NanoLog uses printf format string
- Less flexible TypeDescriptors
- Metadata generation
  - Separate preprocessor
  - **C++17 version writes metadata at first usage**