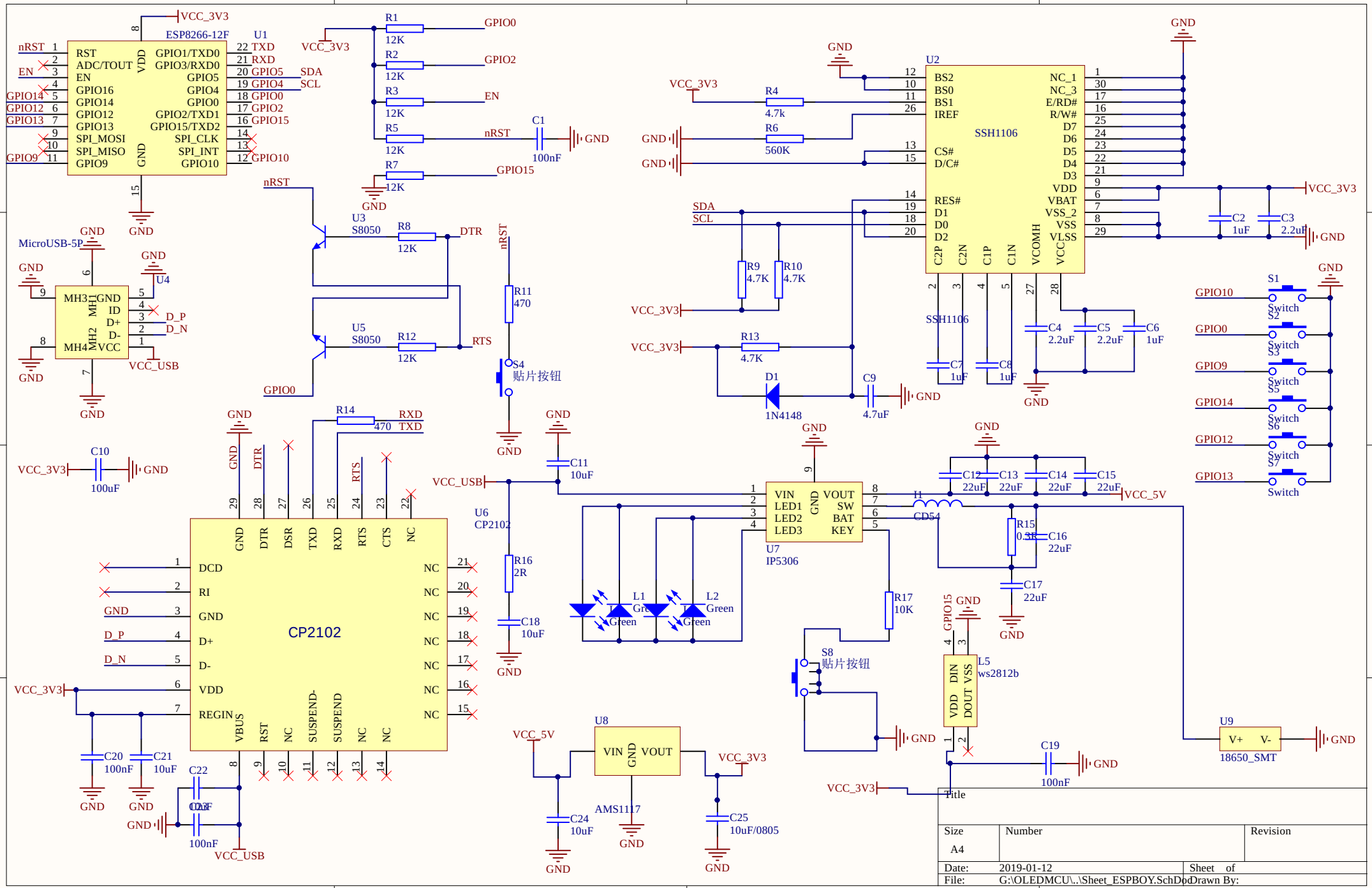

Title

Size	Number	Revision
A4		

Date: 2019-01-12 Sheet of

File: G:\OLEDMCU\..\Sheet_ESPBOY.SchDoc Drawn By:

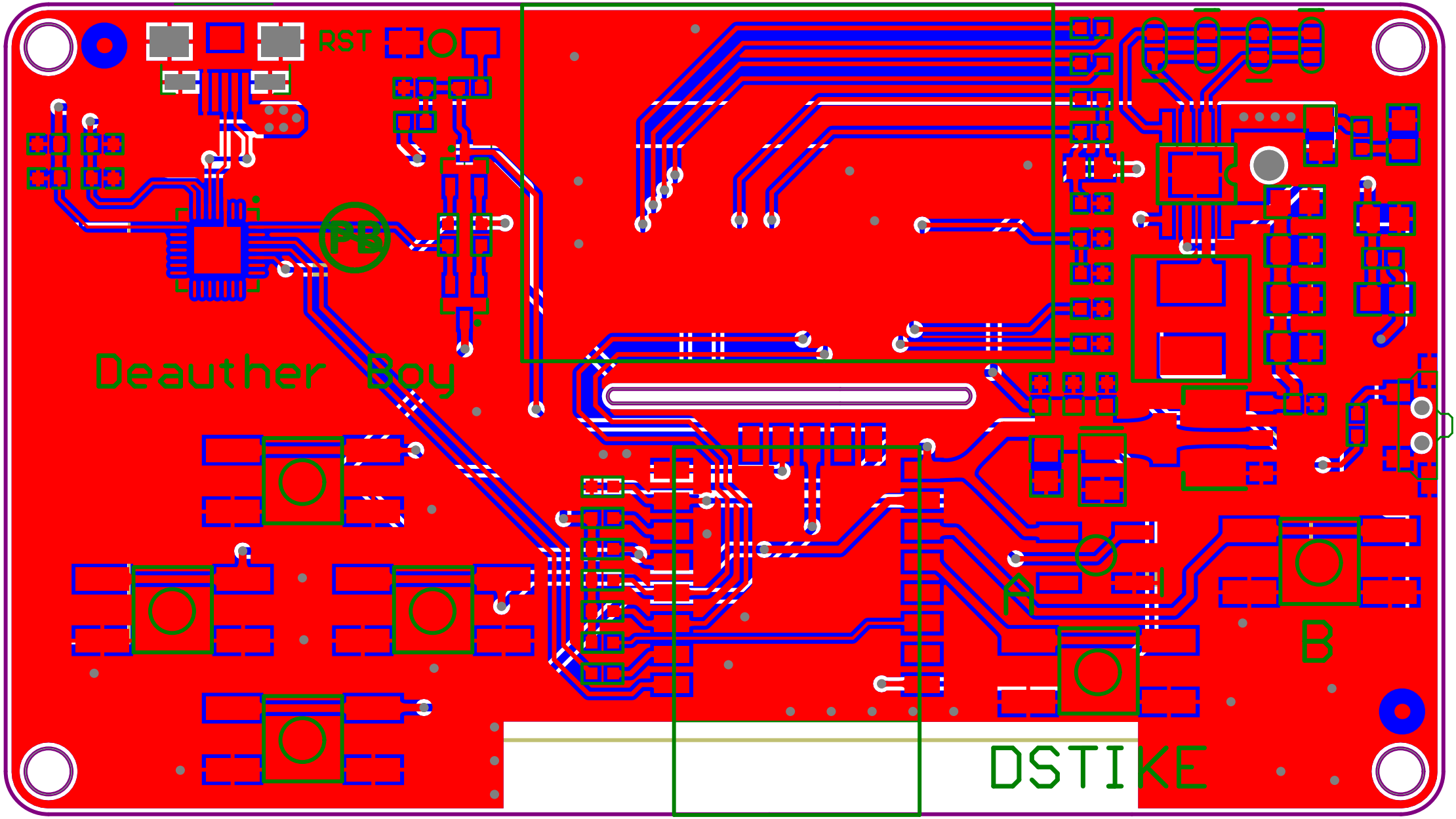
RST
Deauther Boy
A
B
DSTIKE