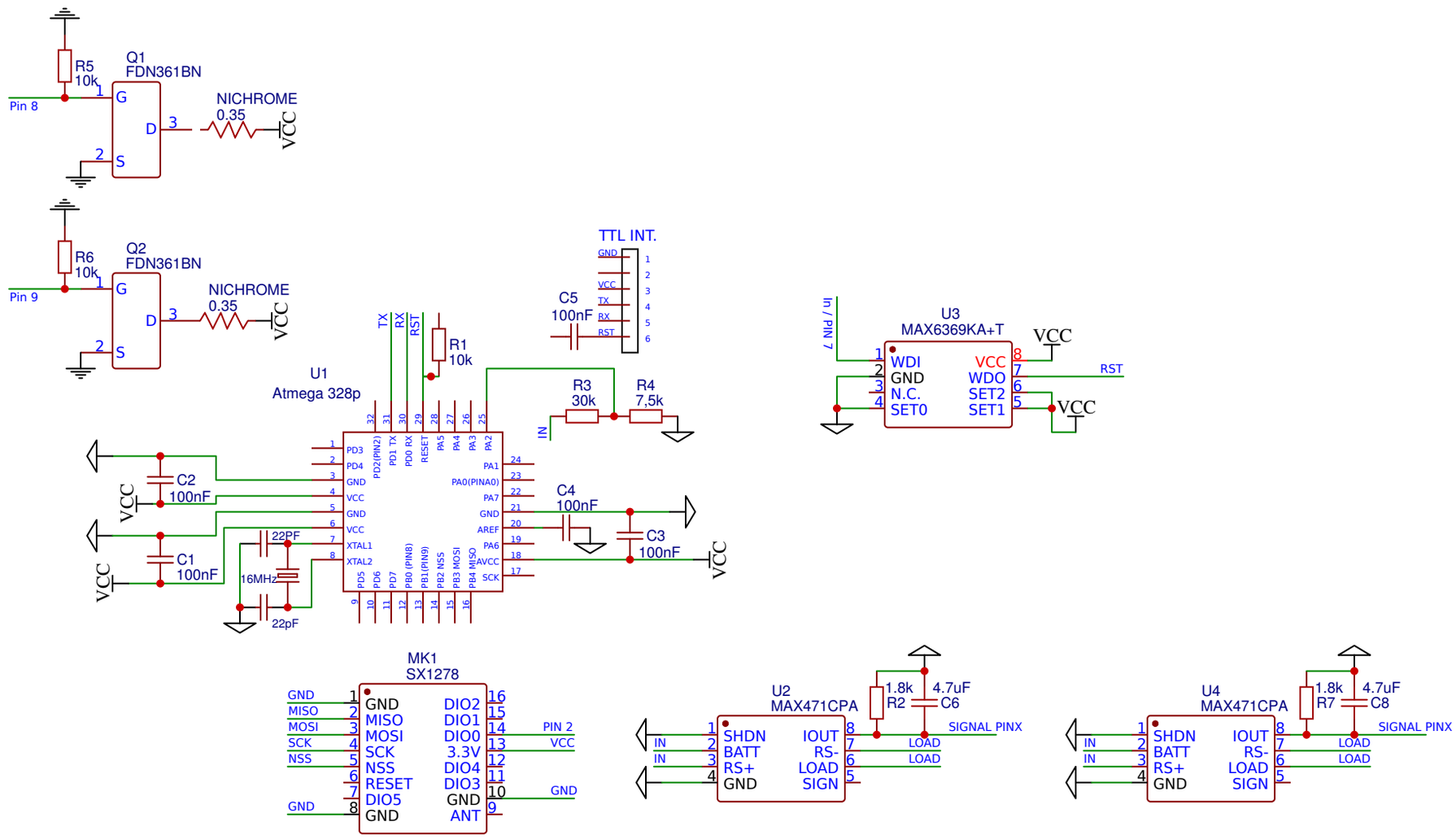

TITLE: Beacon draft	REV: 1.1
Date: 2018-07-16	Sheet: 1/1
EasyEDA V5.6.10	Drawn By: julianfer5