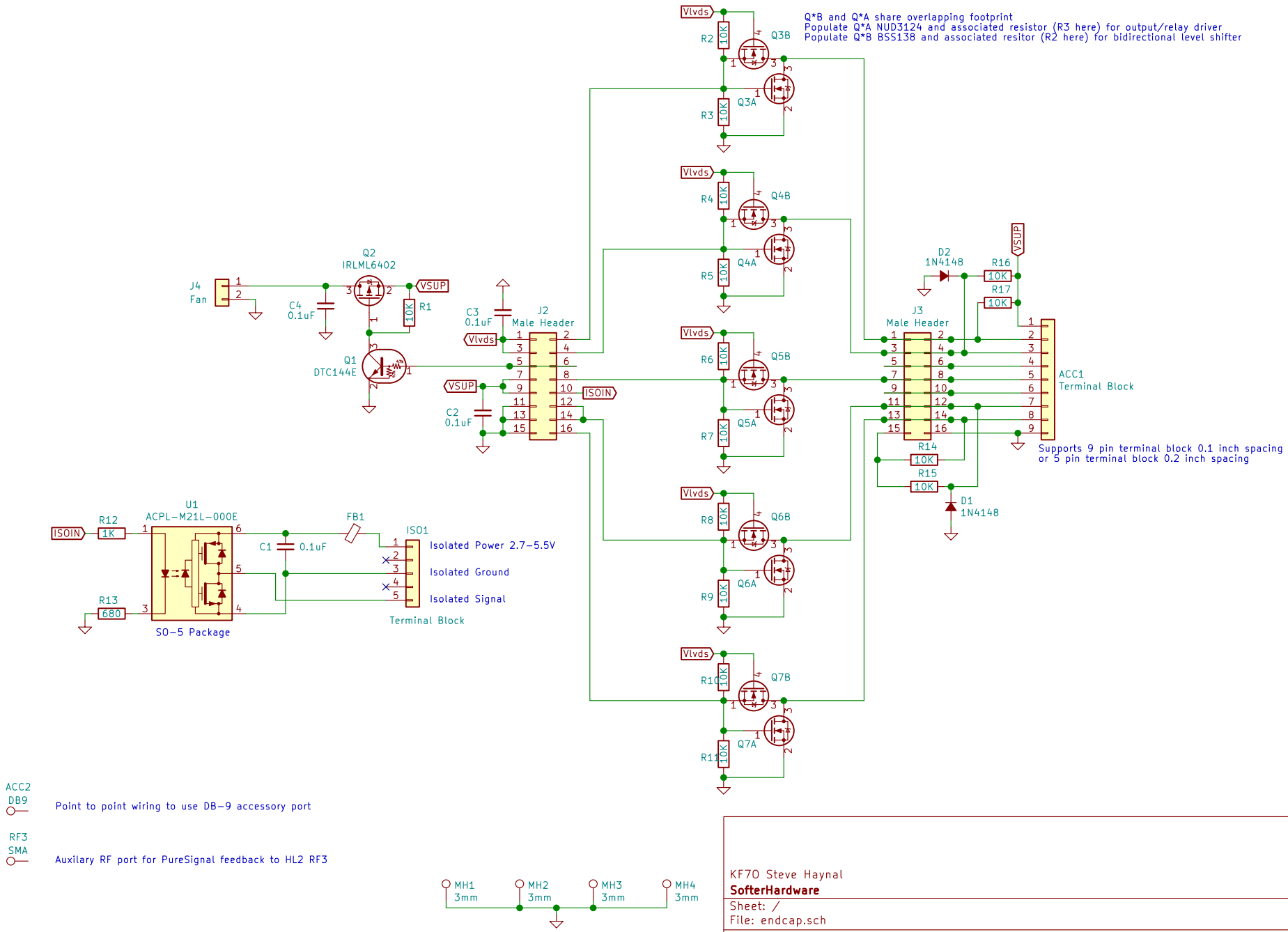


KF7O Steve Haynal
**SofterHardware**
Sheet: /
File: endcap.sch

***Title: HL2 End Plate***

| | | |
|---|---|---|
| Size: USLetter | Date: 2019-11-24 | **Rev: 2.0** |
| KiCad E.D.A. kicad 5.0.2-bee76a070ubuntu16.04.1 | | Id: 1/1 |