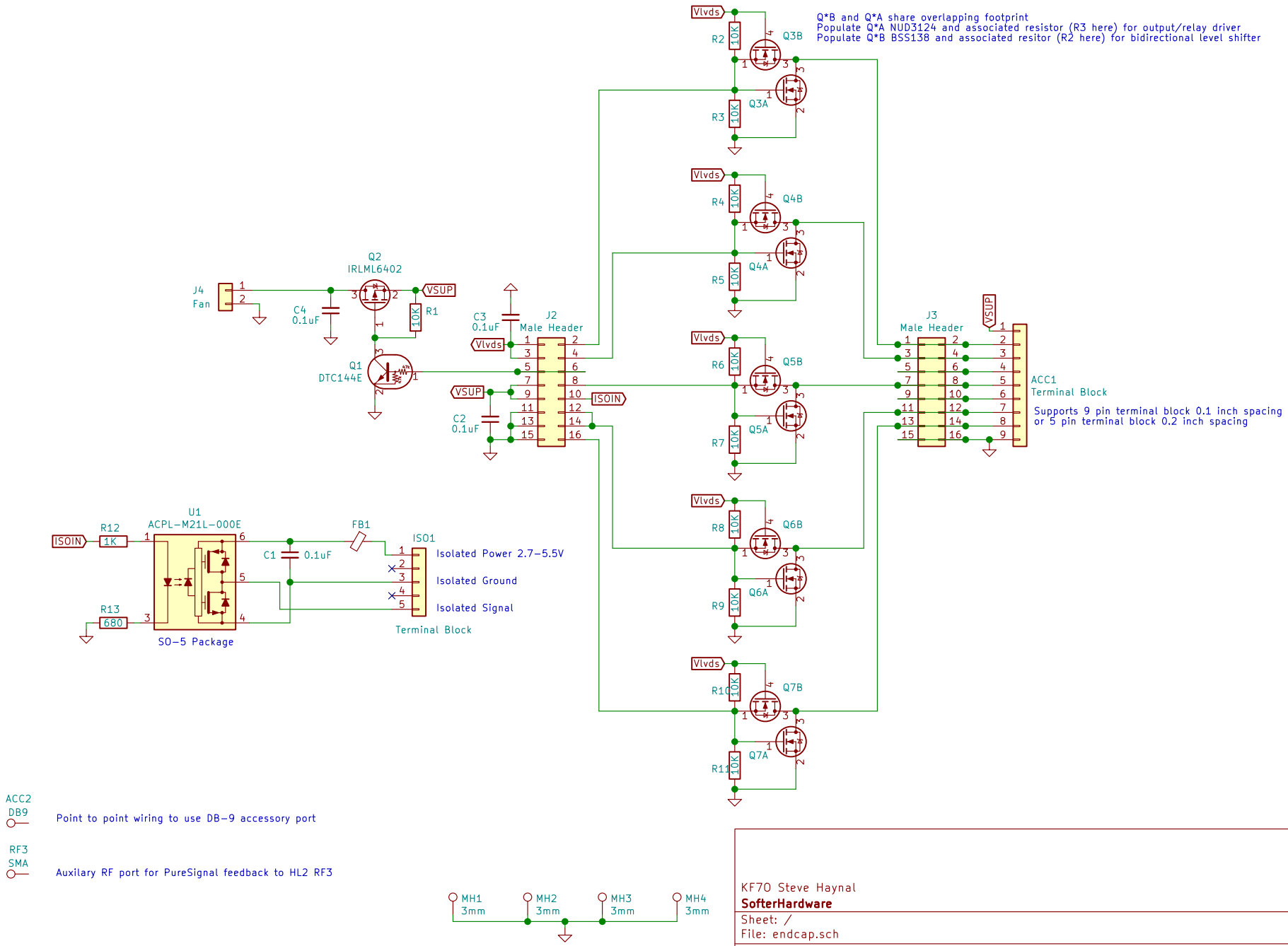

KF7O Steve Haynal
SofterHardware
Sheet: /
File: endcap.sch

Title: HL2 End Plate

Size: USLetter	Date: 2019-11-23	**Rev: 2.0**
KiCad E.D.A. kicad 5.0.2-bee76a070ubuntu16.04.1		Id: 1/1