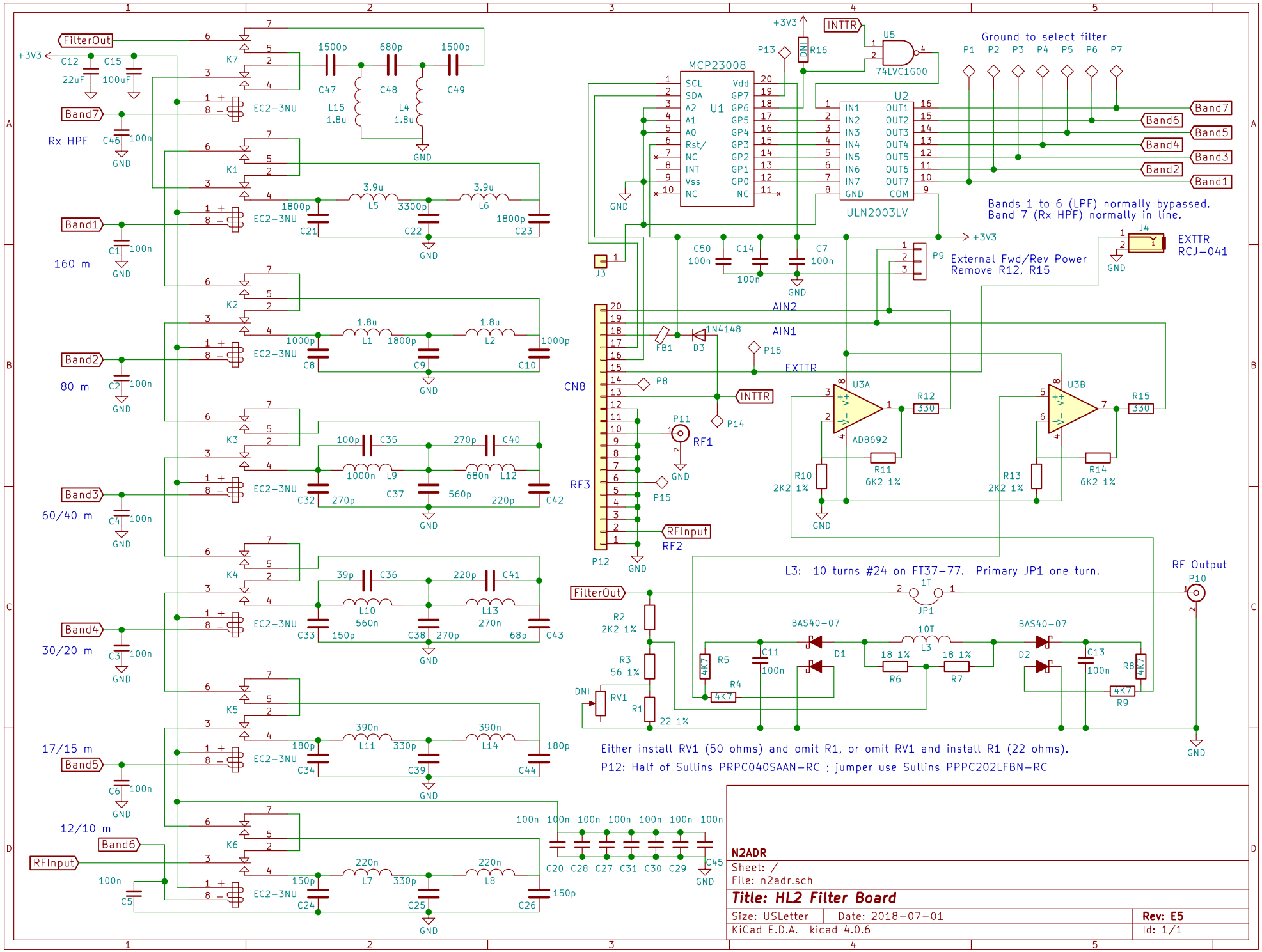

N2ADR

Sheet: /

File: n2adr.sch

Title: HL2 Filter Board

Size: USLetter	Date: 2018-07-01	Rev: E5
KiCad E.D.A. kicad 4.0.6		Id: 1/1