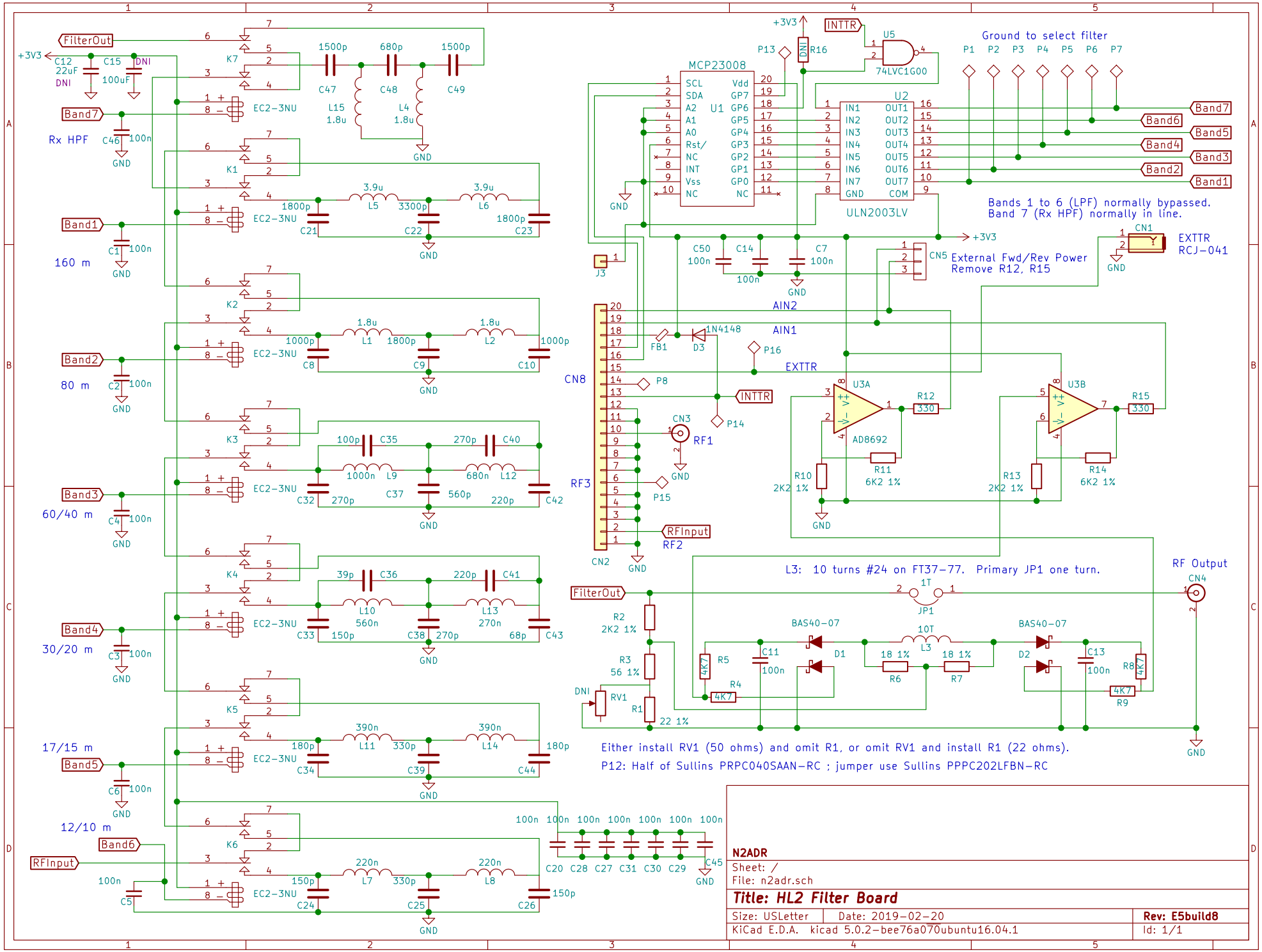
FilterOut
+3V3
C12 22uF DNI
C15 100uF DNI
Band7
Rx HPF
C46 100n
GND
K7
EC2-3NU
1500p
680p
1500p
C47
C48
C49
L15 1.8u
L4 1.8u
Band1
160 m
C1 100n
K1
1800p
3.9u
L5
3300p
3.9u
L6
1800p
C21
C22
C23
Band2
80 m
C2 100n
K2
1000p
1.8u
L1
1800p
1.8u
L2
1000p
C8
C9
C10
Band3
60/40 m
C4 100n
K3
100p
C35
270p
C40
1000n
L9
680n
L12
C32
270p
C37
560p
220p
C42
Band4
30/20 m
C3 100n
K4
39p
C36
220p
C41
L10 560n
L13 270n
C33
150p
C38
270p
68p
C43
Band5
17/15 m
C6 100n
K5
390n
390n
L11
330p
L14
180p
180p
C34
C39
C44
Band6
12/10 m
RFInput
C5 100n
K6
220n
220n
L7
330p
L8
150p
150p
C24
C25
C26
100n 100n 100n 100n 100n 100n 100n
C20 C28 C27 C31 C30 C29 C45
MCP23008
U1
SCL
SDA
A2
A1
A0
Rst/
NC
INT
Vss
NC
Vdd
GP7
GP6
GP5
GP4
GP3
GP2
GP1
GP0
NC
P13
+3V3
DNI R16
INTTR
U5
74LVC1G00
U2
ULN2003LV
IN1 IN2 IN3 IN4 IN5 IN6 IN7 GND
OUT1 OUT2 OUT3 OUT4 OUT5 OUT6 OUT7 COM
Ground to select filter
P1 P2 P3 P4 P5 P6 P7
Band7
Band6
Band5
Band4
Band3
Band2
Band1
Bands 1 to 6 (LPF) normally bypassed.
Band 7 (Rx HPF) normally in line.
J3
C50 100n
C14 100n
C7 100n
CN5
External Fwd/Rev Power
Remove R12, R15
CN1
EXTTR
RCJ-041
AIN2
AIN1
EXTTR
FB1
D3
1N4148
P16
CN8
P8
INTTR
P14
CN3
RF1
RF3
P15
RFInput
RF2
CN2
U3A
AD8692
R12 330
R11 6K2 1%
R10 2K2 1%
U3B
R15 330
R14 6K2 1%
R13 2K2 1%
L3: 10 turns #24 on FT37-77. Primary JP1 one turn.
RF Output
CN4
FilterOut
R2 2K2 1%
R3 56 1%
DNI RV1
R1 22 1%
R5 4K7
R4 4K7
C11 100n
BAS40-07
D1
10T
L3
18 1%
R6
18 1%
R7
BAS40-07
D2
C13 100n
R8 4K7
R9 4K7
1T
JP1
Either install RV1 (50 ohms) and omit R1, or omit RV1 and install R1 (22 ohms).
P12: Half of Sullins PRPC040SAAN-RC ; jumper use Sullins PPPC202LFBN-RC
N2ADR
Sheet: /
File: n2adr.sch
Title: HL2 Filter Board
Size: USLetter
Date: 2019-02-20
Rev: E5build8
KiCad E.D.A. kicad 5.0.2-bee76a070ubuntu16.04.1
Id: 1/1