◊ CRITICAL DIMENSION

NOTES: (UNLESS OTHERWISE SPECIFIED)

1. ALL DIMENSIONS ARE TO THEORETICAL INTERSECTIONS.
2. THIS DRAWING IS A SUPPLEMENT TO THE 3D DATABASE. PART FEATURES AND PRODUCTION TOOLING INFORMATION SHALL BE DERIVED FROM THE DATABASE.
3. ALL DIMENSIONS SHOWN ARE FOR PART INSPECTION ONLY. IN THE EVENT OF A CONFLICT BETWEEN THE DATABASE AND THIS DRAWING, THE DATABASE SHALL GOVERN UNLESS SPECIFICALLY NOTED OTHERWISE. ALL UNSPECIFIED TOLERANCES ARE TO BE TO THE SECOND PLACE DECIMAL TOLERANCE, PROFILE, RELATIVE TO THE DATA BASE.
4. FLASH AND PARTING LINE MISMATCH NOT TO EXCEED .004 INCH.
5. MOLD DESIGN TO MINIMIZE EJECTOR PIN MARKS, GATE BLUSH, FLOW LINES, AND WELD MARKS.
6. GATE TO BE TRIMMED TO WITHIN .004 INCH OF FLUSH.
7. MATERIAL: LEXAN EXL 9134, UL 94V-0, RoHS COMPLIANT, UV STABILIZED.
8. COLOR: CLEAR.
9. FINISH: SP1-A2 EXCEPT WHERE SHOWN
10. PARTS TO BE INDIVIDUALLY BAGGED TO PREVENT SCRATCHES DURING SHIPMENT. LABEL WITH PART ID.

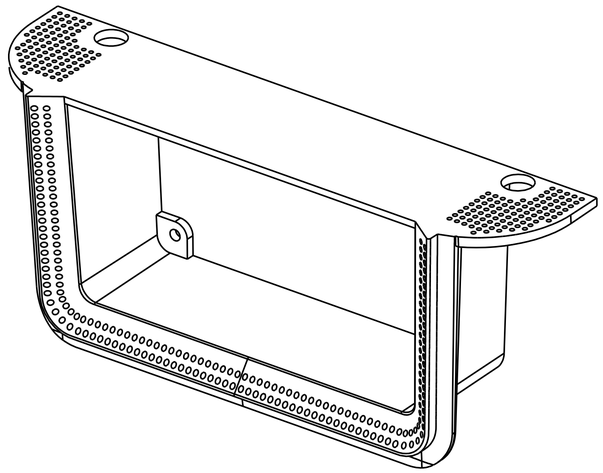

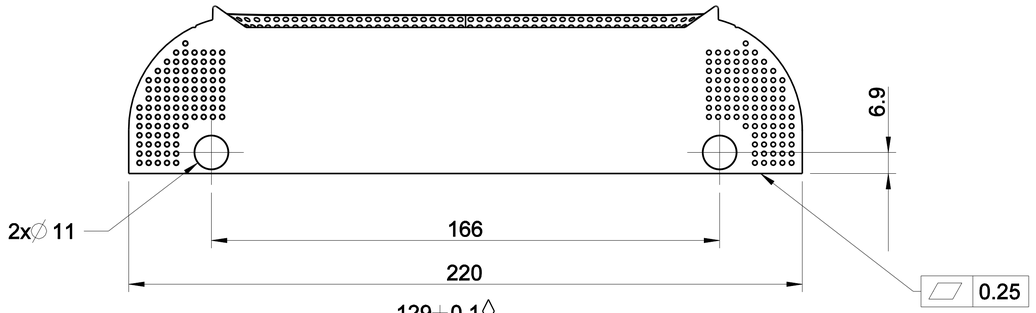

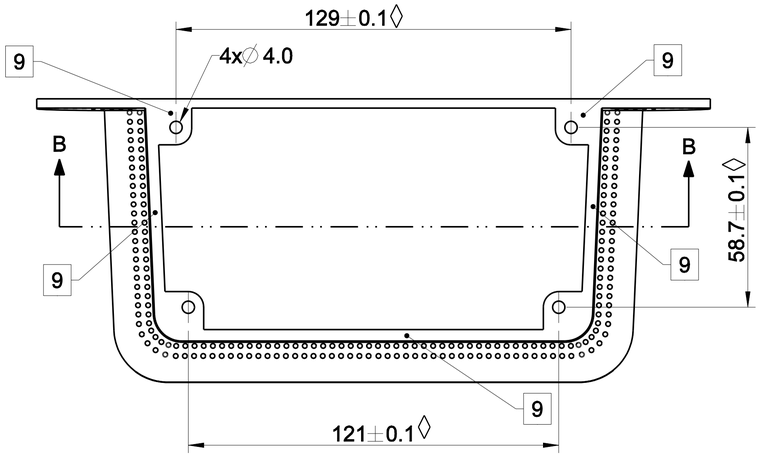

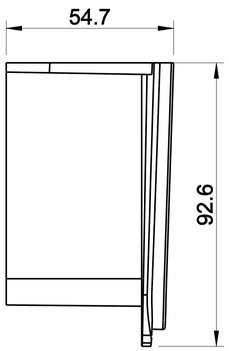

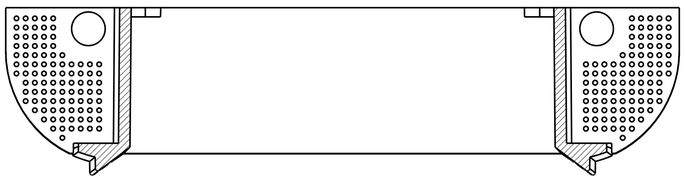

SECTION B-B

01		DRAFT RELEASE	30/11/2016
REV	CRQ NO	DESCRIPTION	RELEASED DATE
FINISH SPECIFICATION		REFER NOTE	
MATERIAL SPECIIFCATION		REFER NOTE	
UNLESS OTHERWISE SPECIFIED GENERALTOL=130 DIN 16901		OpenCellular	DOCUMENT CODE PART DRAWING
THIRD ANGLE	UNIT mm	PART NAME	PLASTIC EXTERNAL LIGHT PIPE, OPENCELLULAR,TIP	SCALE 0.500
	SHEET SIZE A3	PART NO	227-001263	SHEET 1/1