◊ CRITICAL DIMENSION

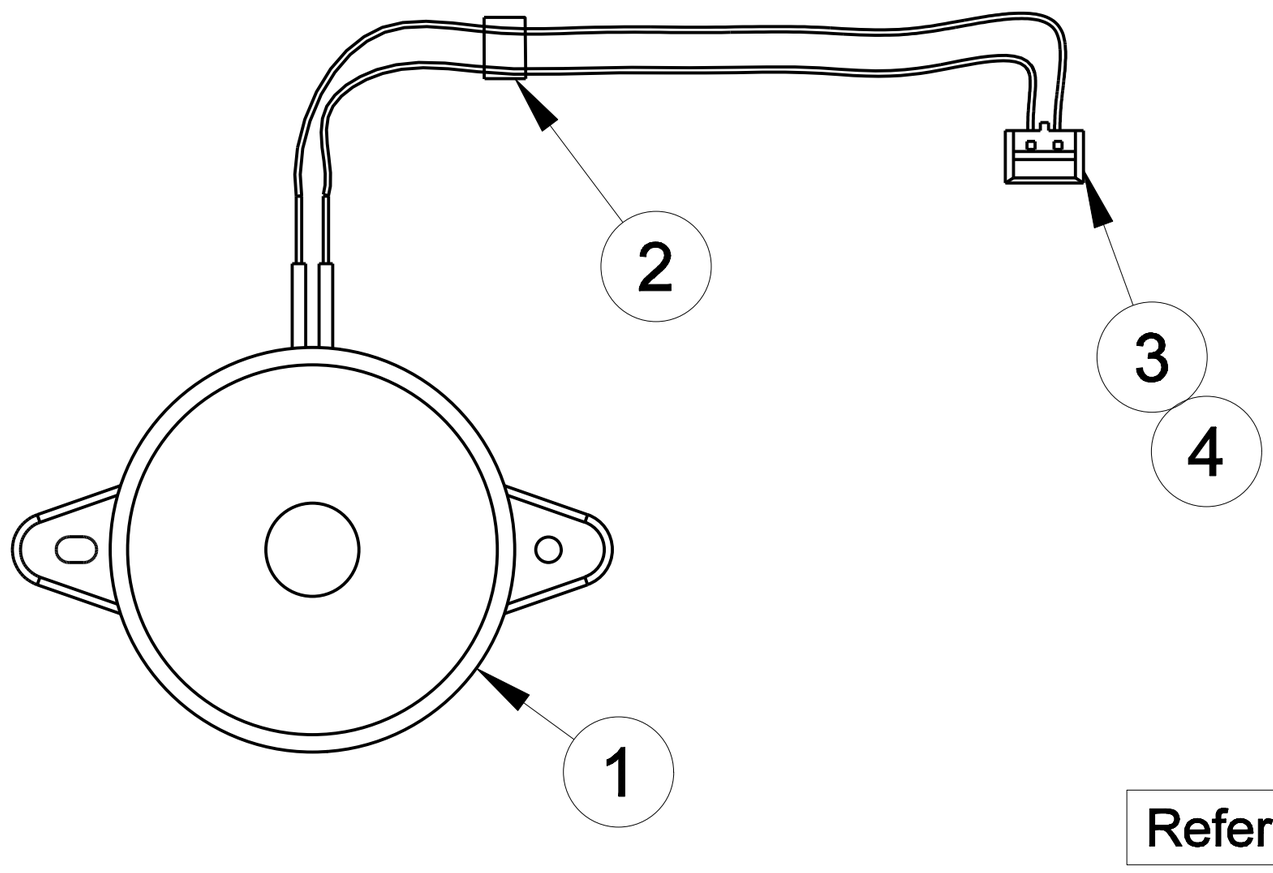

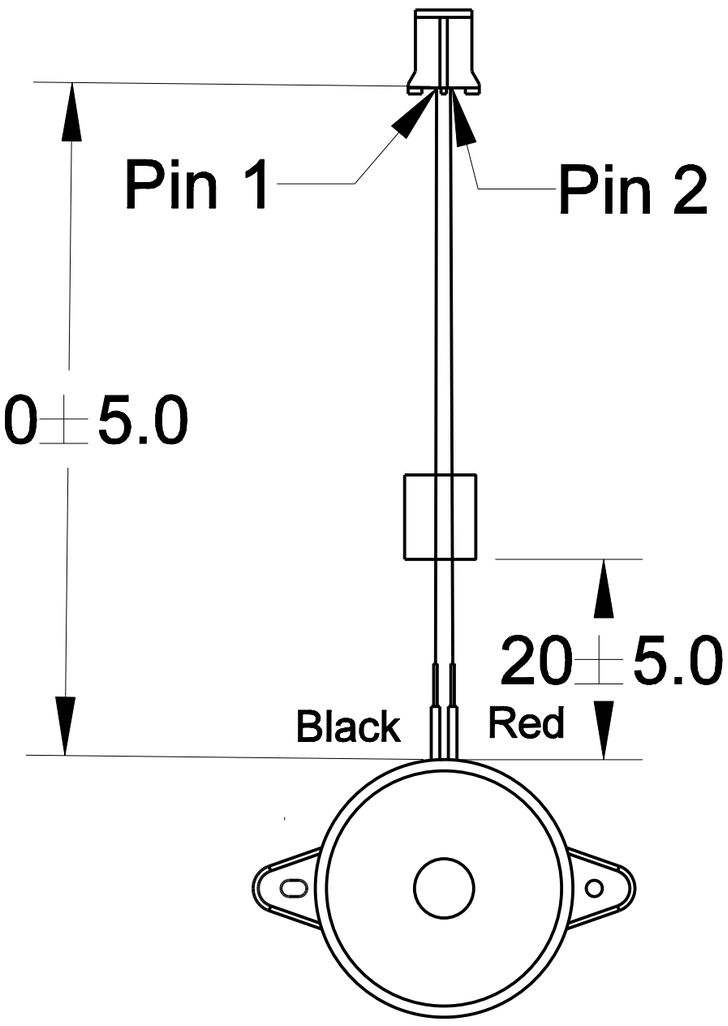

Refernce details for wiring and marking

Notes
1. This assembly must have material compliance recoginzed by UL
2. Contact & Connector housing must be from the same manufacturer
3. Stripping & Crimping instructions, use qualified connector Manufacturer individual instructions

Pin Configuration

BUZZER Cable Color	Connector Pin #
Black	1
Red	2

S.No	Open Cellular Part #	Manufacturer Part #	Description	Manufacturer	Quantity
1	213-000144	CPE-827	Buzzer with cable	CUI INC	1
2	213-000139	-	Marking tube	BRADY	1
3	213-000145	PHR-2	2 mm pitch 2 Pin wire connector	JST	1
4	213-000146	SPH-002T-P0.5L	Crimp Contacts	JST	2

01		DRAFT RELEASE	30/11/2016
REV	CRQ NO	DESCRIPTION	RELEASED DATE
FINISH SPECIFICATION		NA	
MATERIAL SPECIIFCATION		REFER TABLE	
UNLESS OTHERWISE SPECIFIED LINEAR TOL =NA ANGULAR TOL=NA SURFACE FINISH TOL=NA		OpenCellular	DOCUMENT CODE PART DRAWING
THIRD ANGLE	UNIT mm	PART NAME	BUZZER CABLE ASSEMBLY	SCALE 1.100
	SHEET SIZE A4	PART NO	233-000032	SHEET 1/1