◊ CRITICAL DIMENSION

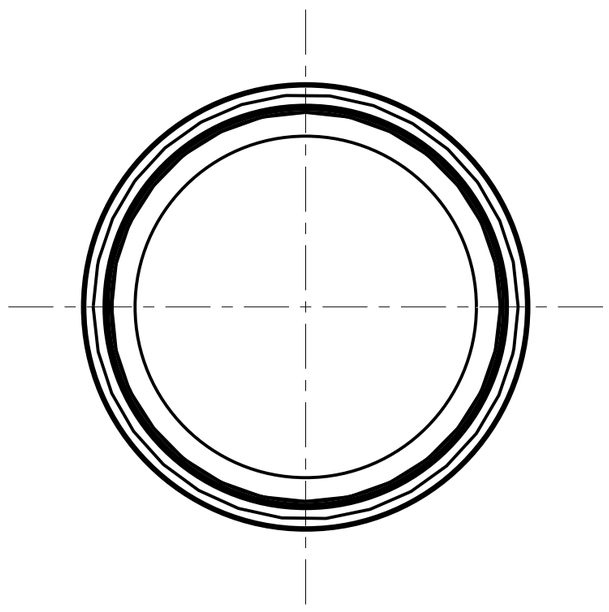

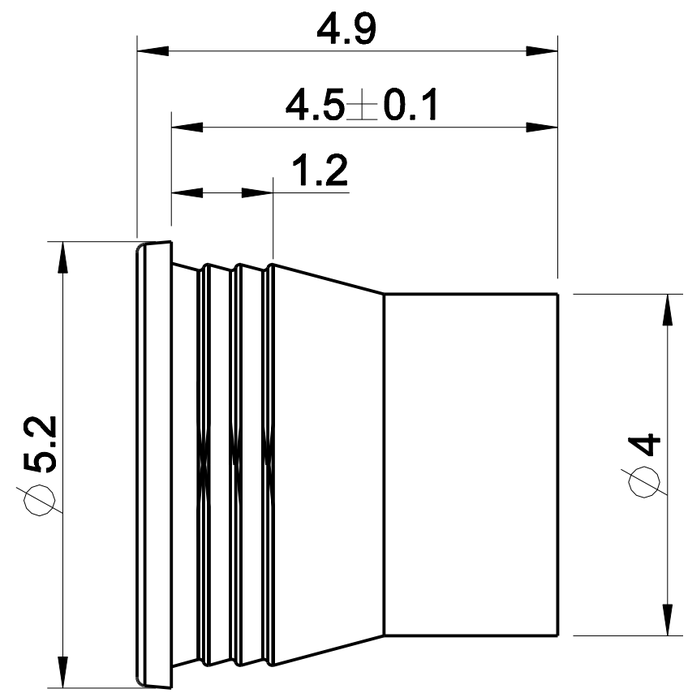

S.NO	DESCRIPTION	MFG PART NO	VENDOR NAME
1	FRONT PANEL LIGHT GUIDE	1293.9116	MENTOR

NOTES:

1. Material - PC Clear UL94
2. This drawing is supplement to the 3D database

01		DRAFT RELEASE	30/11/2016
REV	CRQ NO	DESCRIPTION	RELEASED DATE
FINISH SPECIFICATION		REFER NOTE / TABLE	
MATERIAL SPECIIFCATION		REFER NOTE / TABLE	
UNLESS OTHERWISE SPECIFIED LINEAR TOL =±0.2 ANGULAR TOL=± 0.5° SURFACE FINISH TOL=NA		OpenCellular	DOCUMENT CODE PART DRAWING
THIRD ANGLE	UNIT mm	PART NAME	MECHANICAL ENCLOSURE LIGHT PIPE, OPENCELLULAR,TIP	SCALE 7.000
	SHEET SIZE A4	PART NO	213-000164	SHEET 1/1