TABLE OF CONTENTS

SHEET NUMBER	SHEET NAME	SHEET NUMBER	SHEET NAME
1	INDEX PAGE		
2	SYNC BOARD BLOCK DIAGRAM		
3	SYNC BOARD POWER TREE		
4	LTE LITE MODULE		
5	IO EXPANDER		
6	POWER SUPPLY		
7	I2C TO UART TRANSLATOR		
8	UART SIGNAL ISOLATION		
9	IRIDIUM MODULE		
10	UART SIGNAL ISOLATION		
11	SYNC BOARD CONNECTOR		
12	TEST POINTS		
13	RF FRONT END		
14	TEMPERATURE SENSOR		

REVISION HISTORY			
DATE	VERSION	UPDATED BY	REMARKS
26 JAN 2016	1.00		REV A RELEASE
12 SEP 2016	2.0		LIFE-2 RELEASE
16 DEC 2016	3.0		LIFE-3 RELEASE

FACEBOOK CONNECT1	DOCUMENT NUMBER: 00	
TITLE: INDEX	REV: Life-3	SHEET 1 OF 14

SYNC BOARD BLOCK DIAGRAM

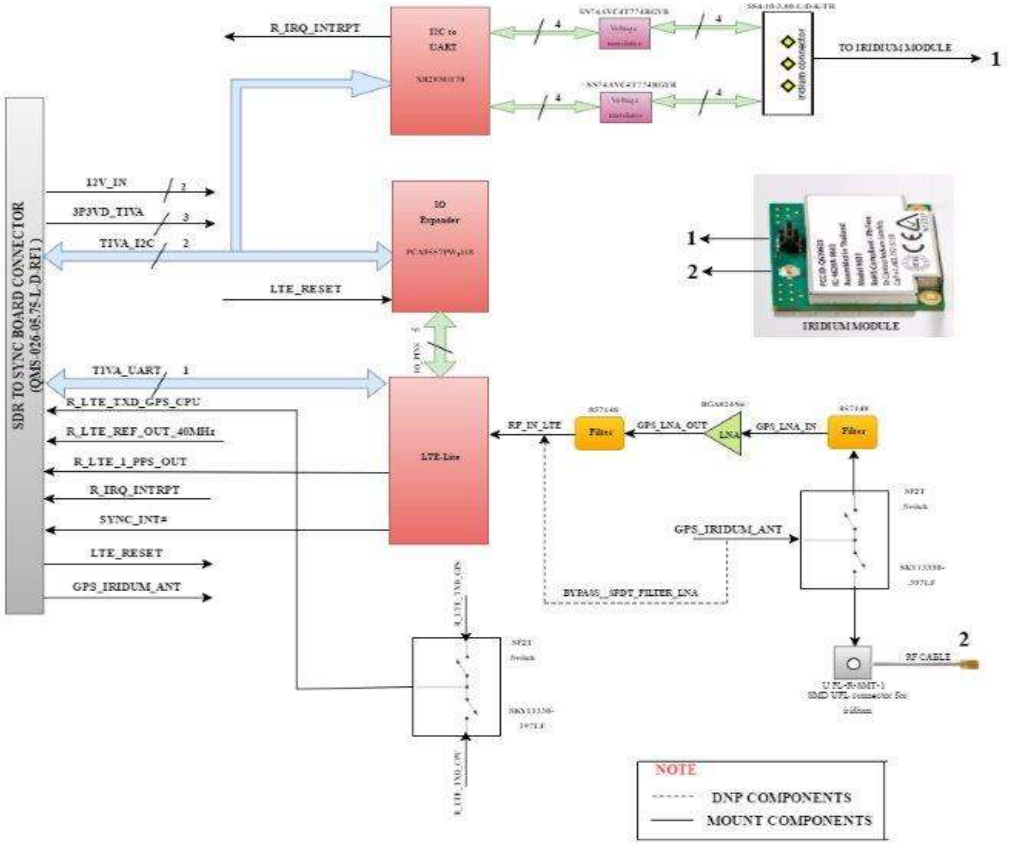

FACEBOOK CONNECT1	DOCUMENT NUMBER: 00	
TITLE: BLOCK DIAGRAM	REV: Life-3	SHEET 2 OF 14

SYNC BOARD POWER TREE

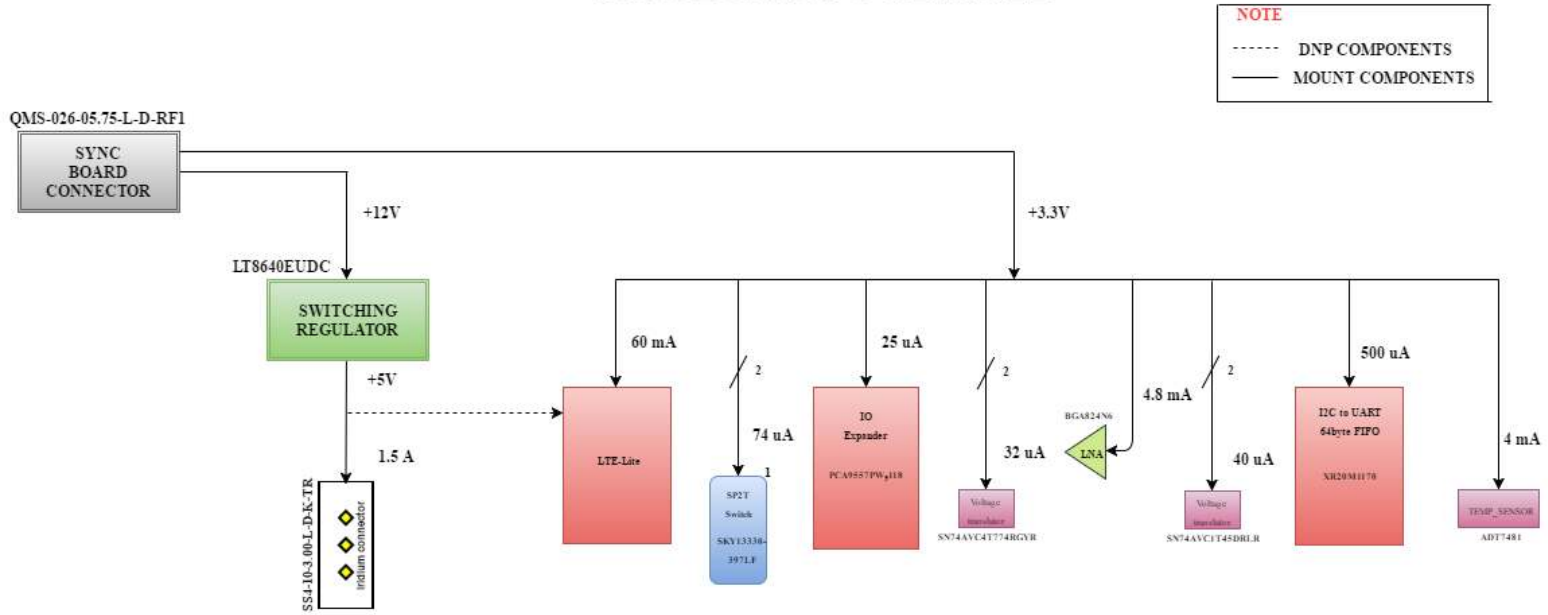

FACEBOOK CONNECT1	DOCUMENT NUMBER: 00	
TITLE: BLOCK DIAGRAM	REV: Life-3	SHEET 3 OF 14

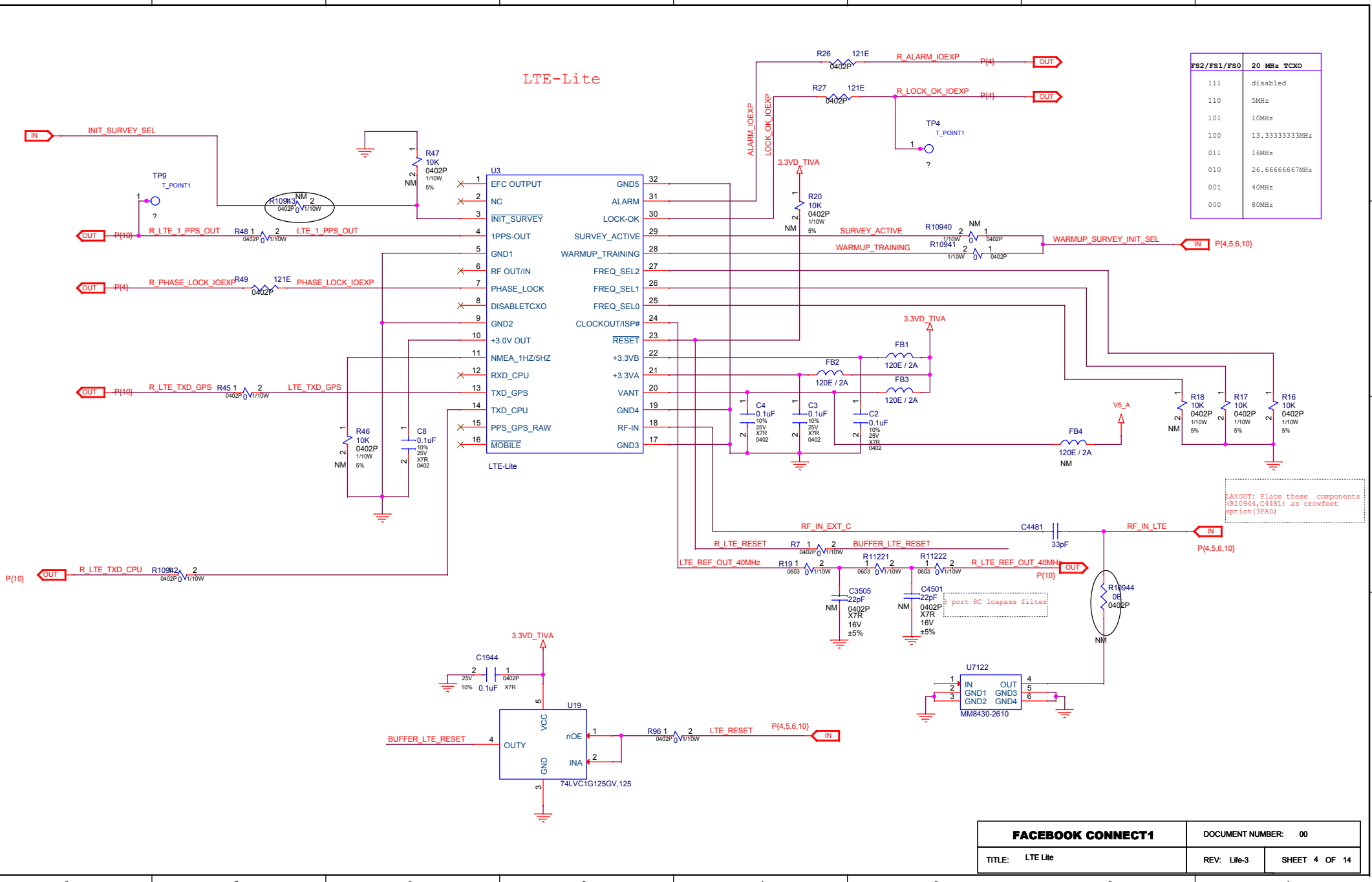

FS2/FS1/FS0	20 MHz TCXO
111	disabled
110	5MHz
101	10MHz
100	13.33333333MHz
011	16MHz
010	26.66666667MHz
001	40MHz
000	80MHz

FACEBOOK CONNECT1	DOCUMENT NUMBER: 00	
TITLE: LTE Lite	REV: Life-3	SHEET 4 OF 14

IO_EXPANDER

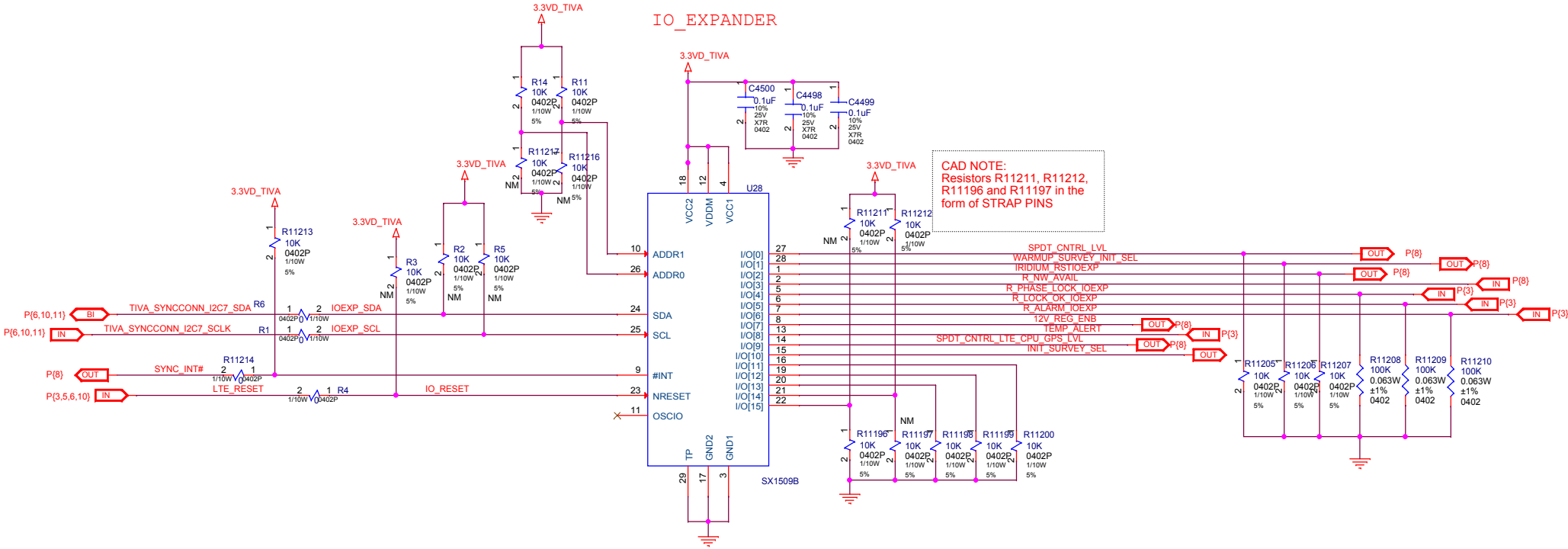

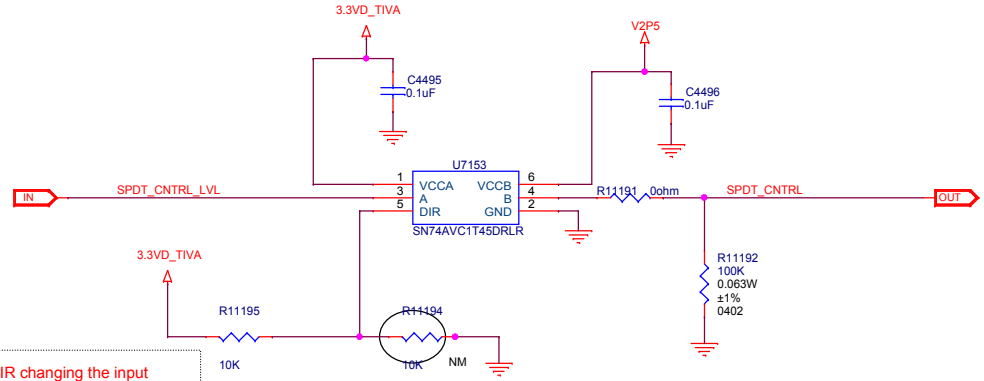

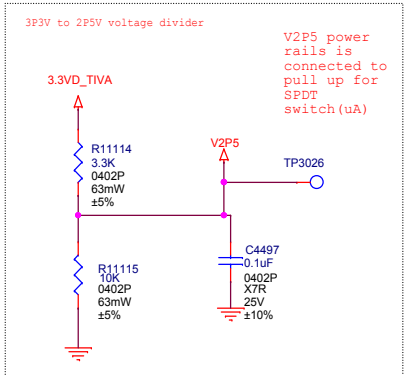

FACEBOOK CONNECT1	DOCUMENT NUMBER: 00	
TITLE: IO Expander	REV: Life-3	SHEET 5 OF 14

12V_5V_REGULATOR

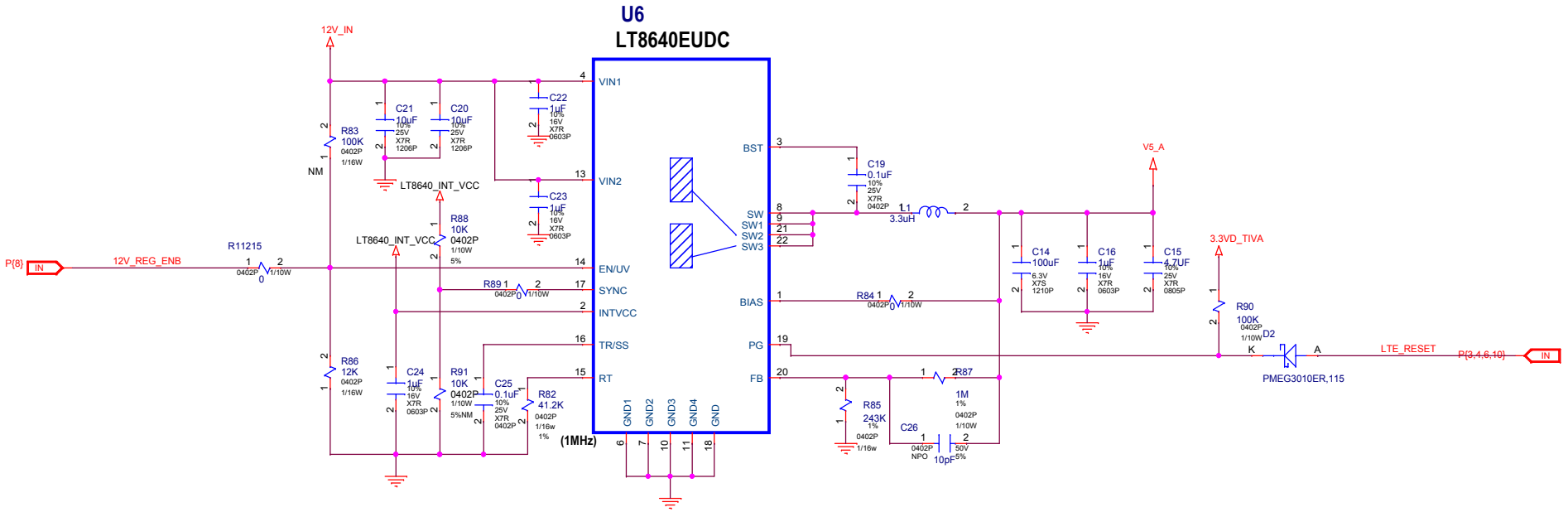

FACEBOOK CONNECT1	DOCUMENT NUMBER: 00	
TITLE: 12V TO 5V DC DC CONVERTER	REV: Life-3	SHEET 6 OF 14

I2C to UART

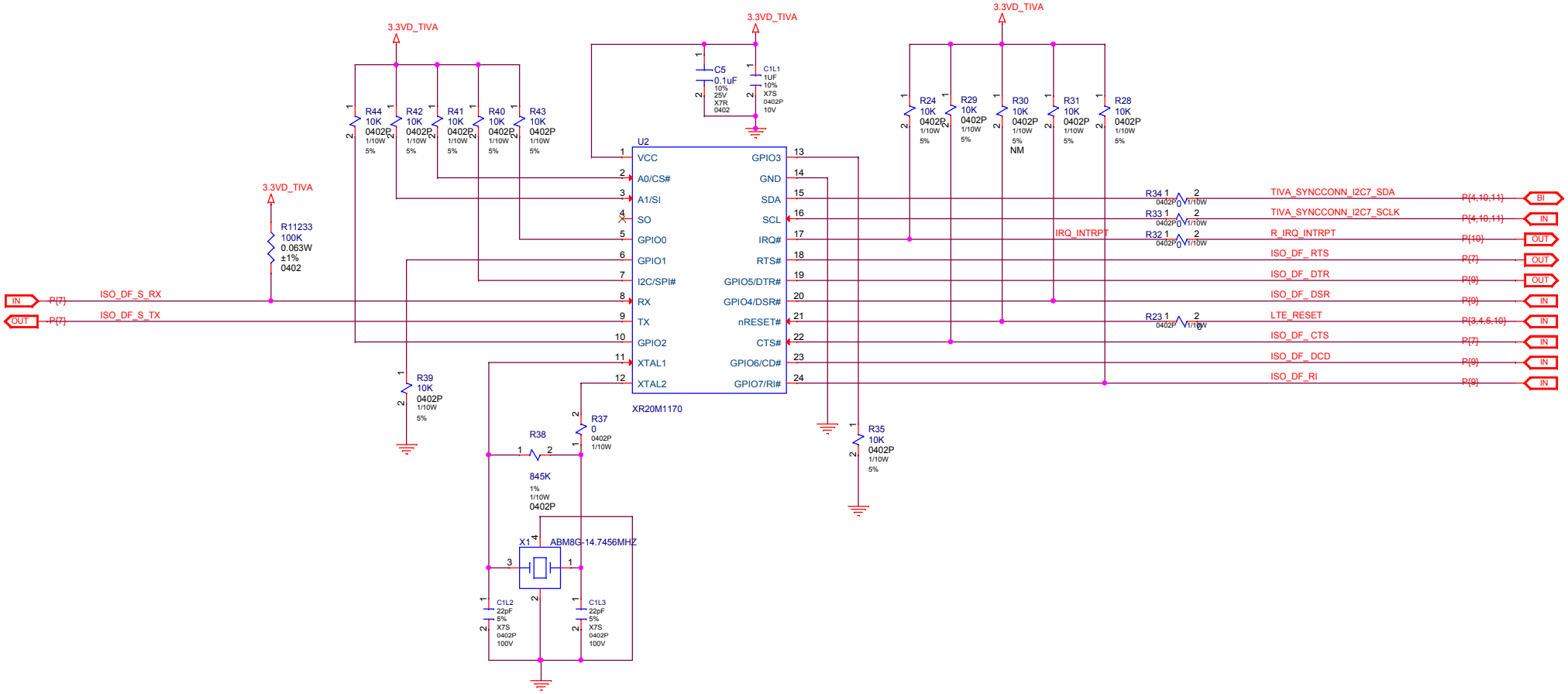

FACEBOOK CONNECT1	DOCUMENT NUMBER: 00	
TITLE: I2C TO UART	REV: Life-3	SHEET 7 OF 14

VOLTAGE TRANSLATOR - 1

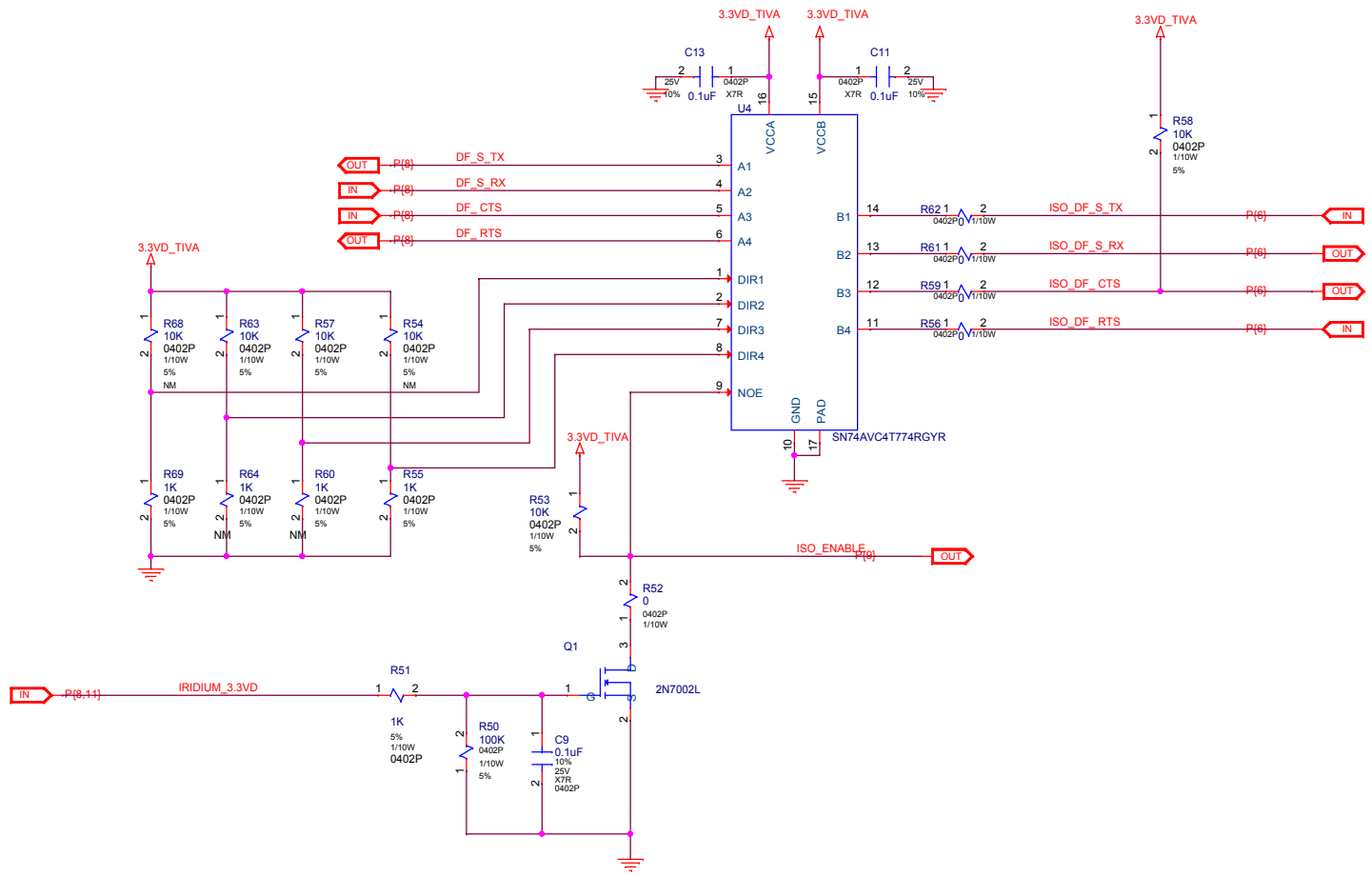

FACEBOOK CONNECT1	DOCUMENT NUMBER: 00	
TITLE: UART ISOLATION	REV: Life-3	SHEET 8 OF 14

IRIDIUM CONNECTOR

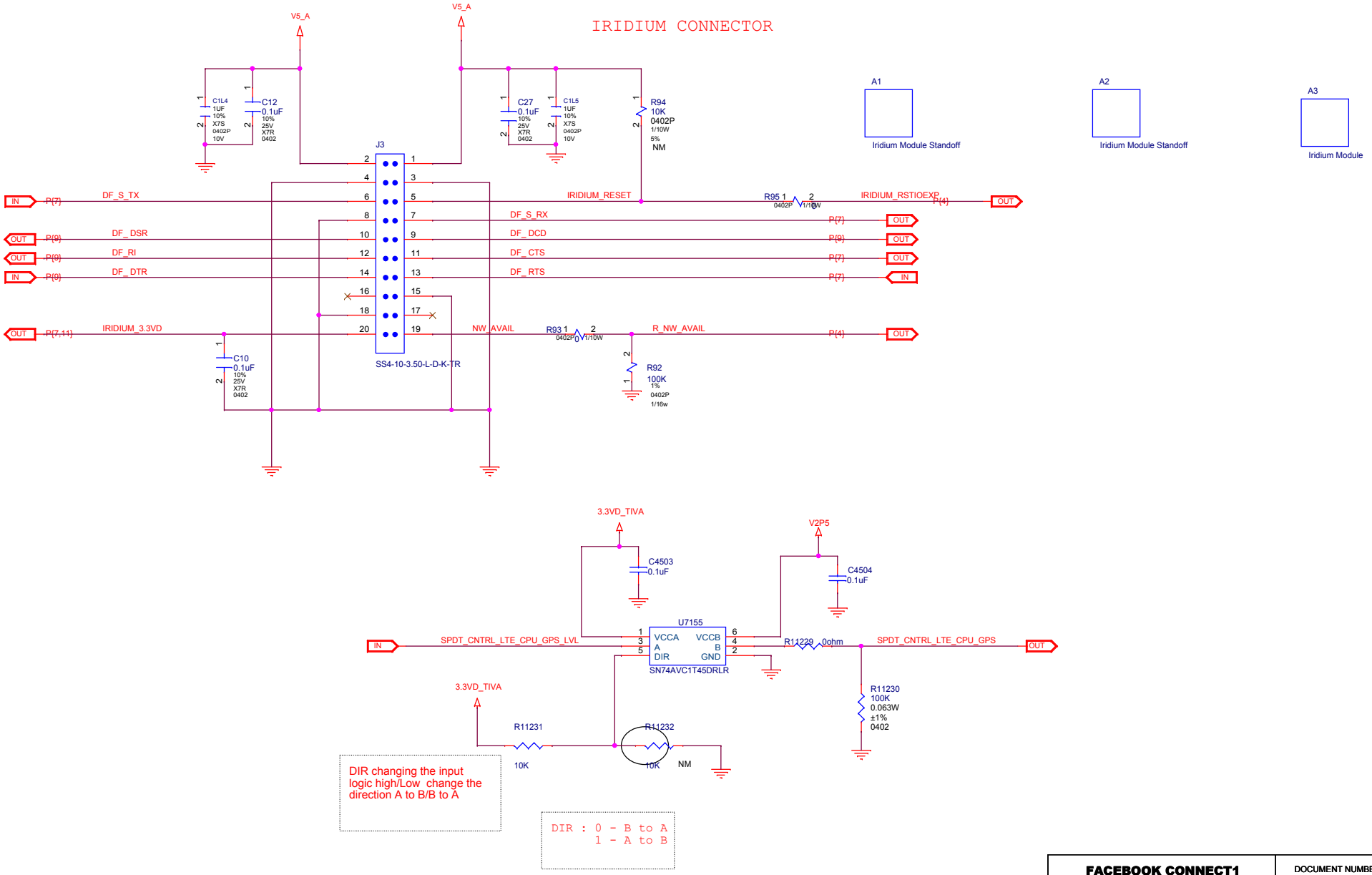

DIR changing the input logic high/Low change the direction A to B/B to A

DIR : 0 - B to A
1 - A to B

FACEBOOK CONNECT1	DOCUMENT NUMBER: 00	
TITLE: IRIDIUM MOGILE	REV: Life-3	SHEET 9 OF 14

VOLTAGE TRANSLATOR - 2

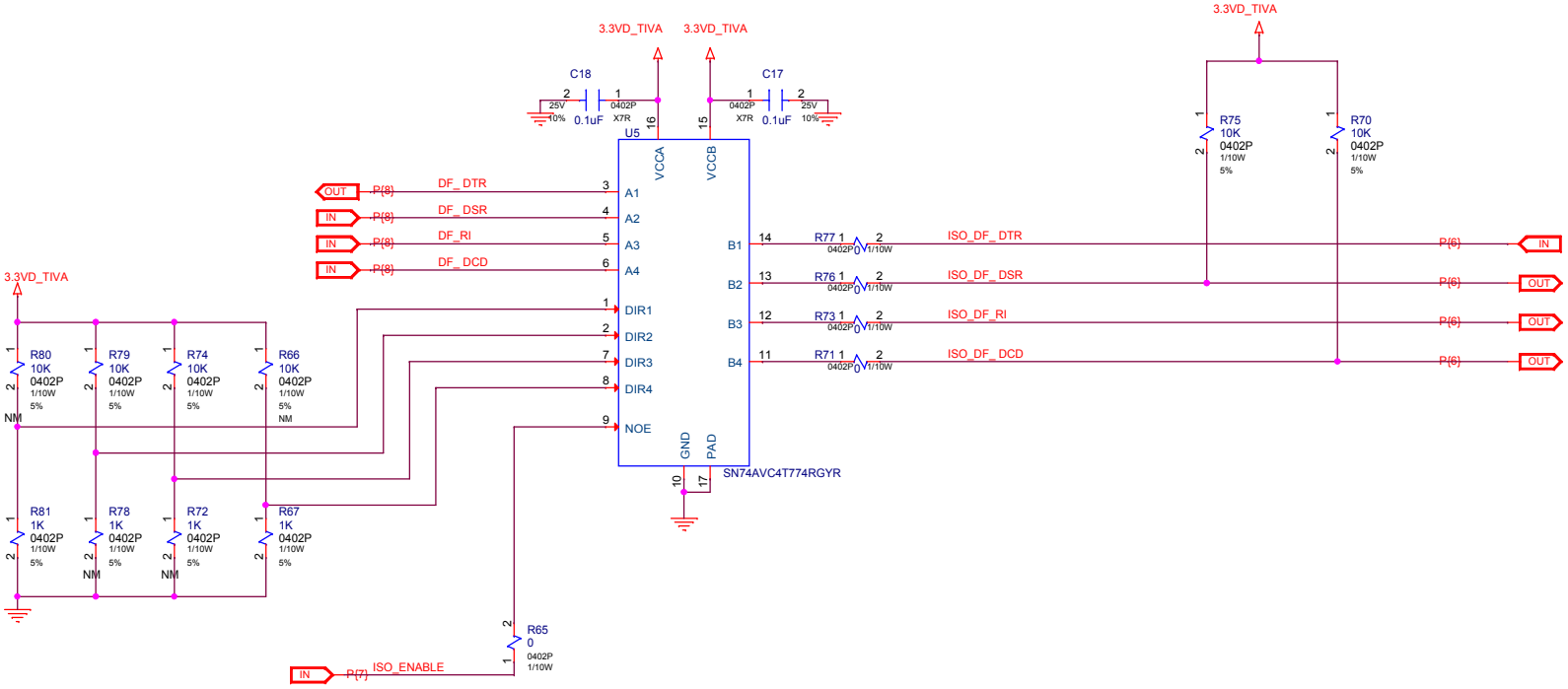

FACEBOOK CONNECT1	DOCUMENT NUMBER: 00	
TITLE: UART ISOLATION	REV: Life-3	SHEET 10 OF 14

SYNC BOARD CONNECTOR

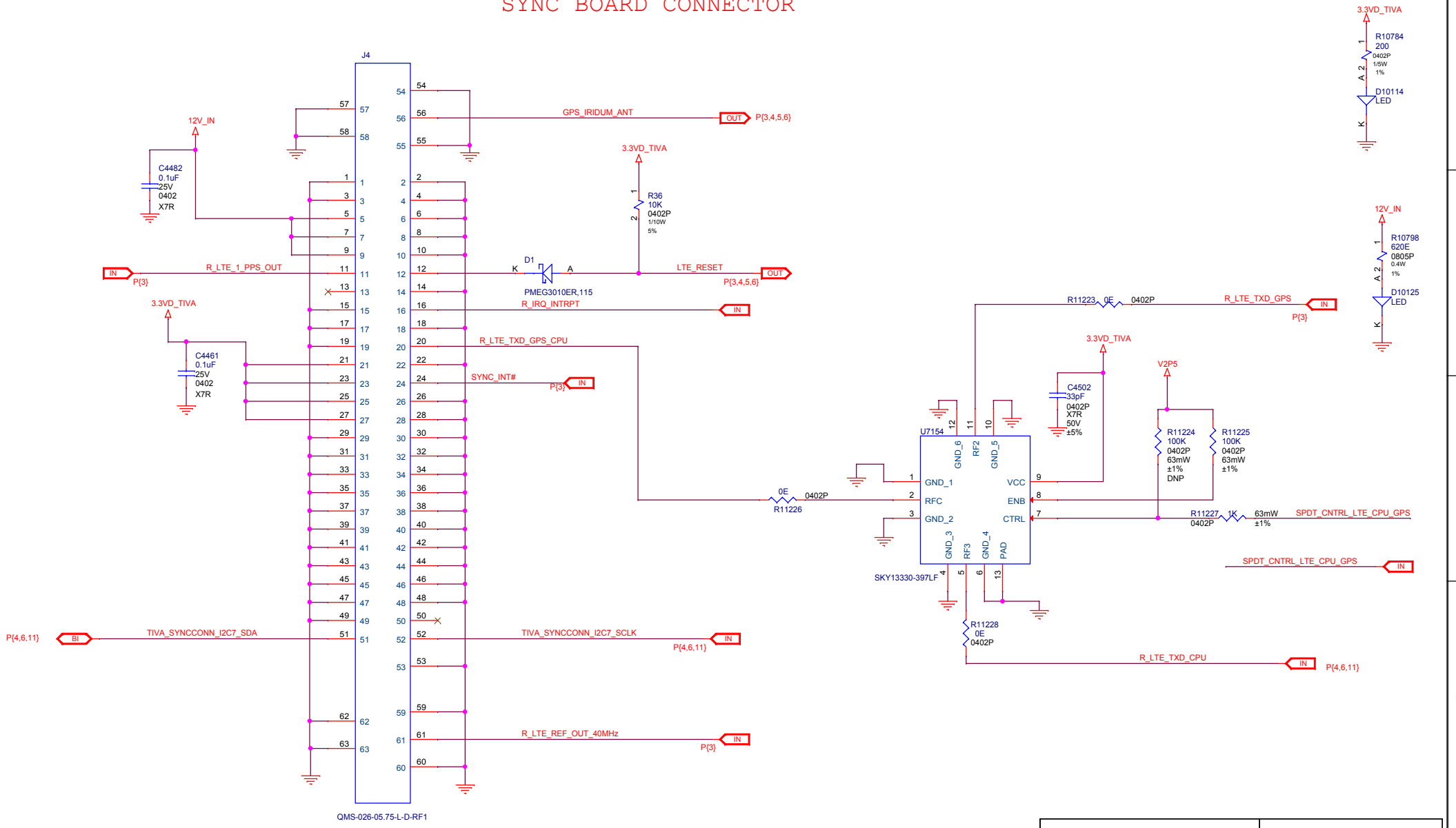

FACEBOOK CONNECT1	DOCUMENT NUMBER: 00	
TITLE: SYNC CONNECTOR AND SP2T SWITCH	REV: Life-3	SHEET11 OF 14

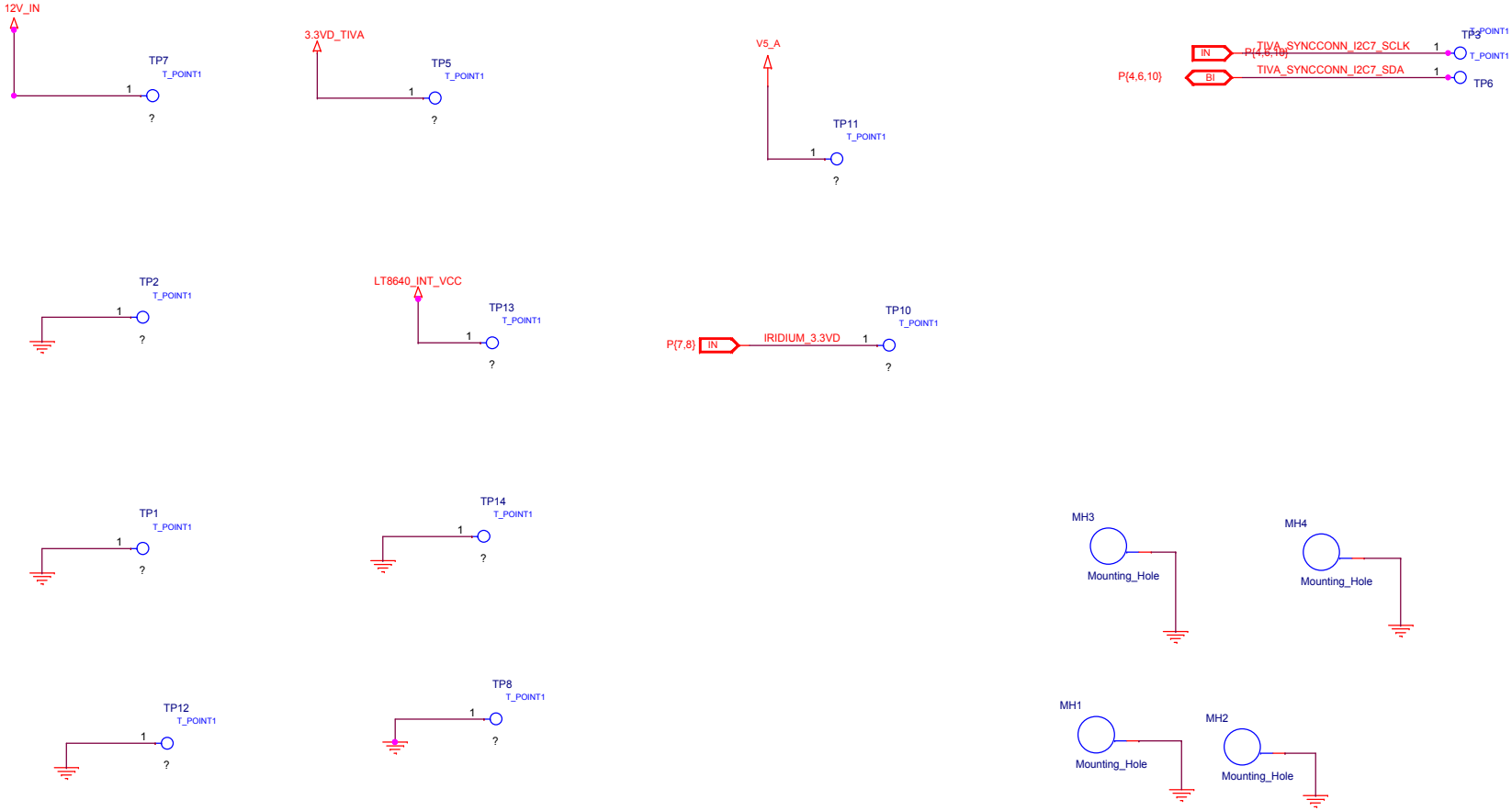

FACEBOOK CONNECT1	DOCUMENT NUMBER: 00	
TITLE: TEST POINTS	REV: Life-3	SHEET 12 OF 14

RF_FRONT_END

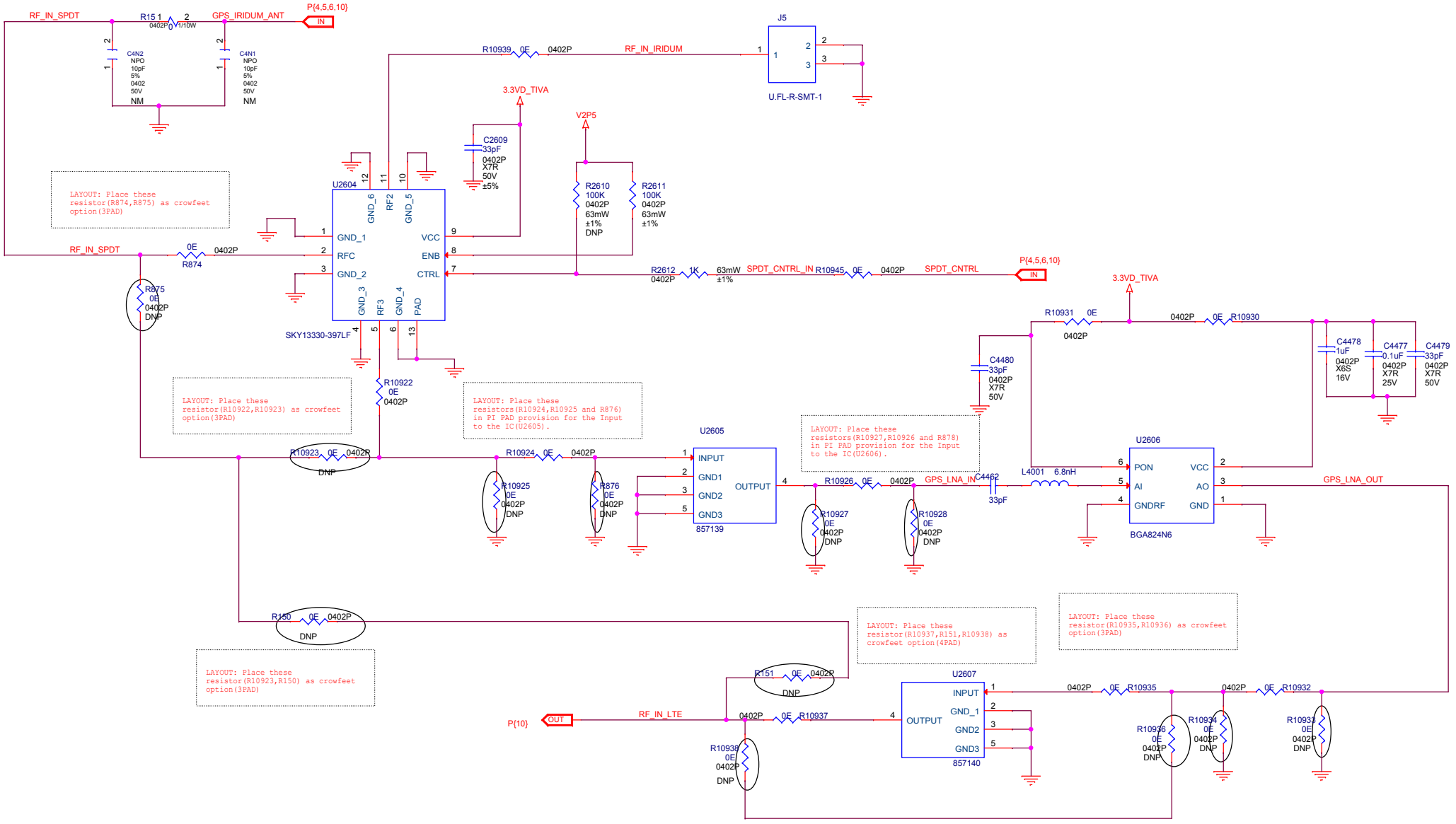

FACEBOOK CONNECT1	DOCUMENT NUMBER: 00	
TITLE: RF FRONT END	REV: Life-3	SHEET 13 OF 14

TEMPERATURE SENSOR

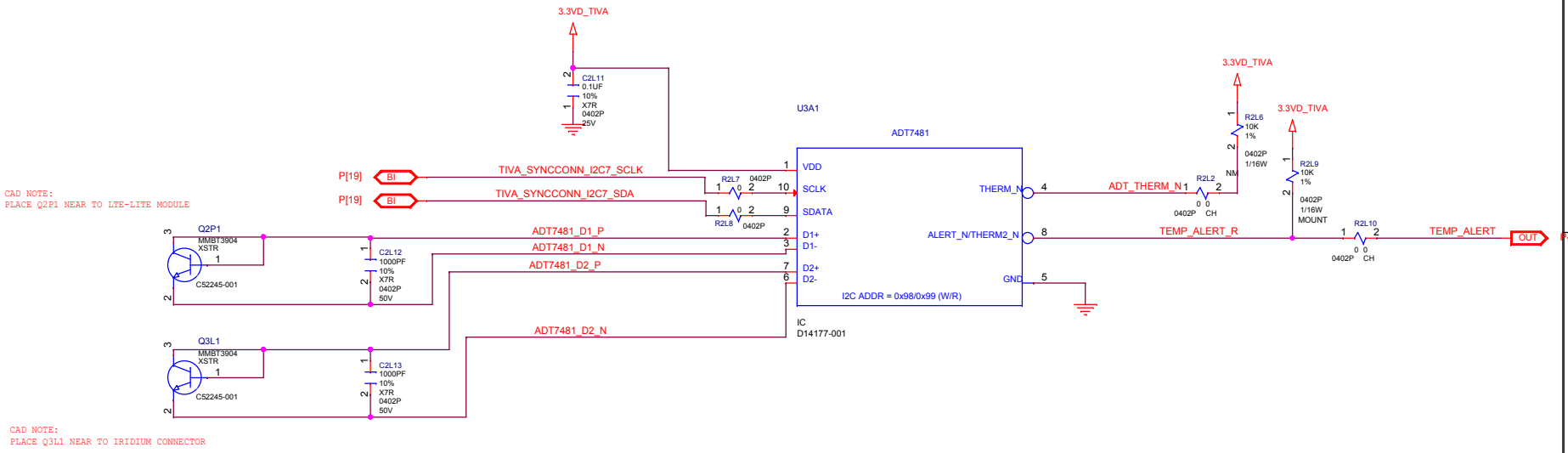

FACEBOOK CONNECT1	DOCUMENT NUMBER: 00	
TITLE: TEMP SENSOR	REV: Life-3	SHEET 14 OF 14