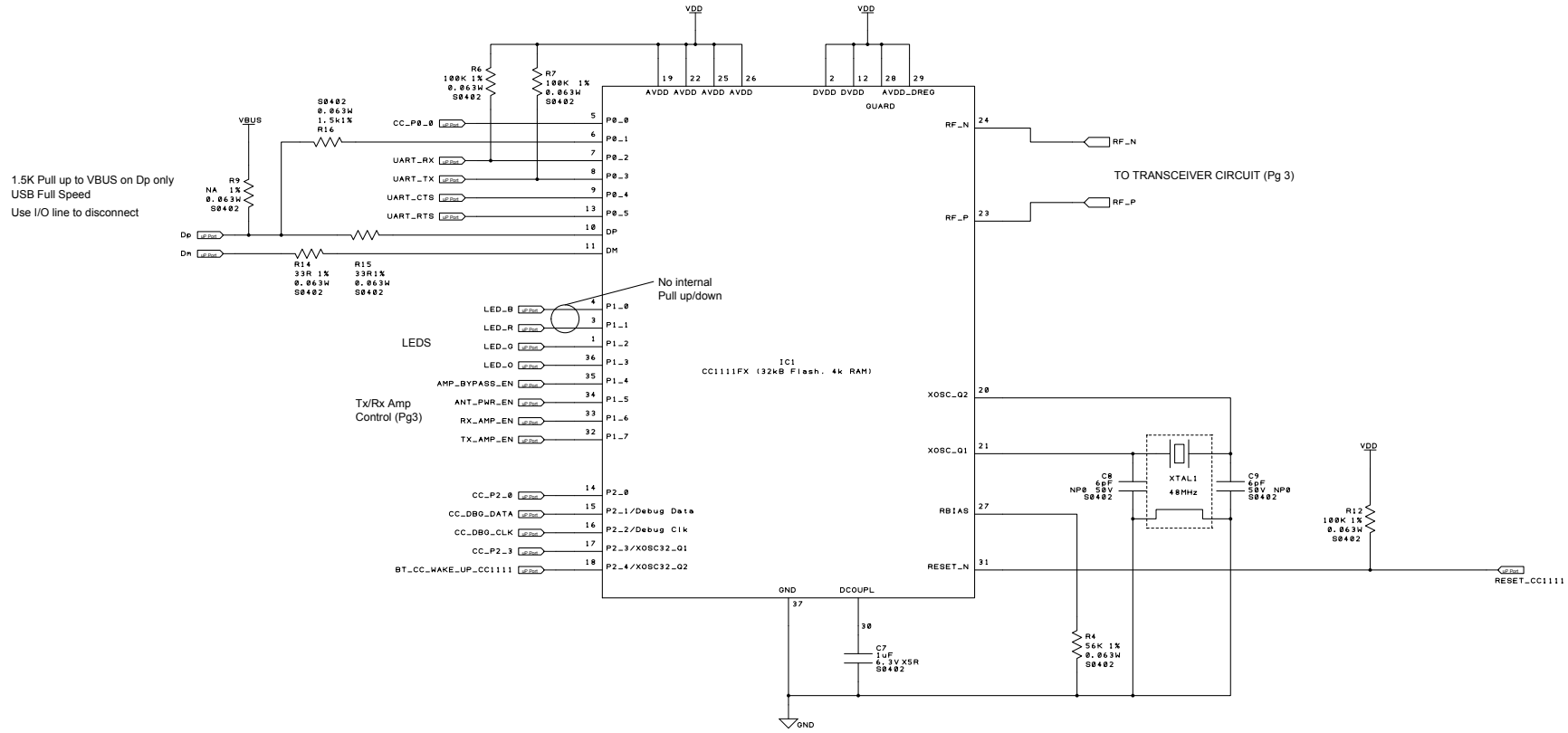


REVISION HISTORY NOTES

| REV | DATE | CHANGE SUMMARY |
|---|---|---|
| 1.50 | 29/08/2016 | Addtion of Blue LED |
| 1.60 | 06/10/2016 | No change to schematic. Modification to PCB silkscreen and USB footprint |

| Rev | Drawn | Date | Projection |
|---|---|---|---|
| 1.60 | D. DOBBYN | 06/10/2016 | Do Not Scale |

Project: ComThings GollumRF Hack rev D

Client: COMTHINGS

Title: CC1111 MICRO

Drawing No.: [DWG_NO]

Sheet: 1 of 3

COMTHINGS

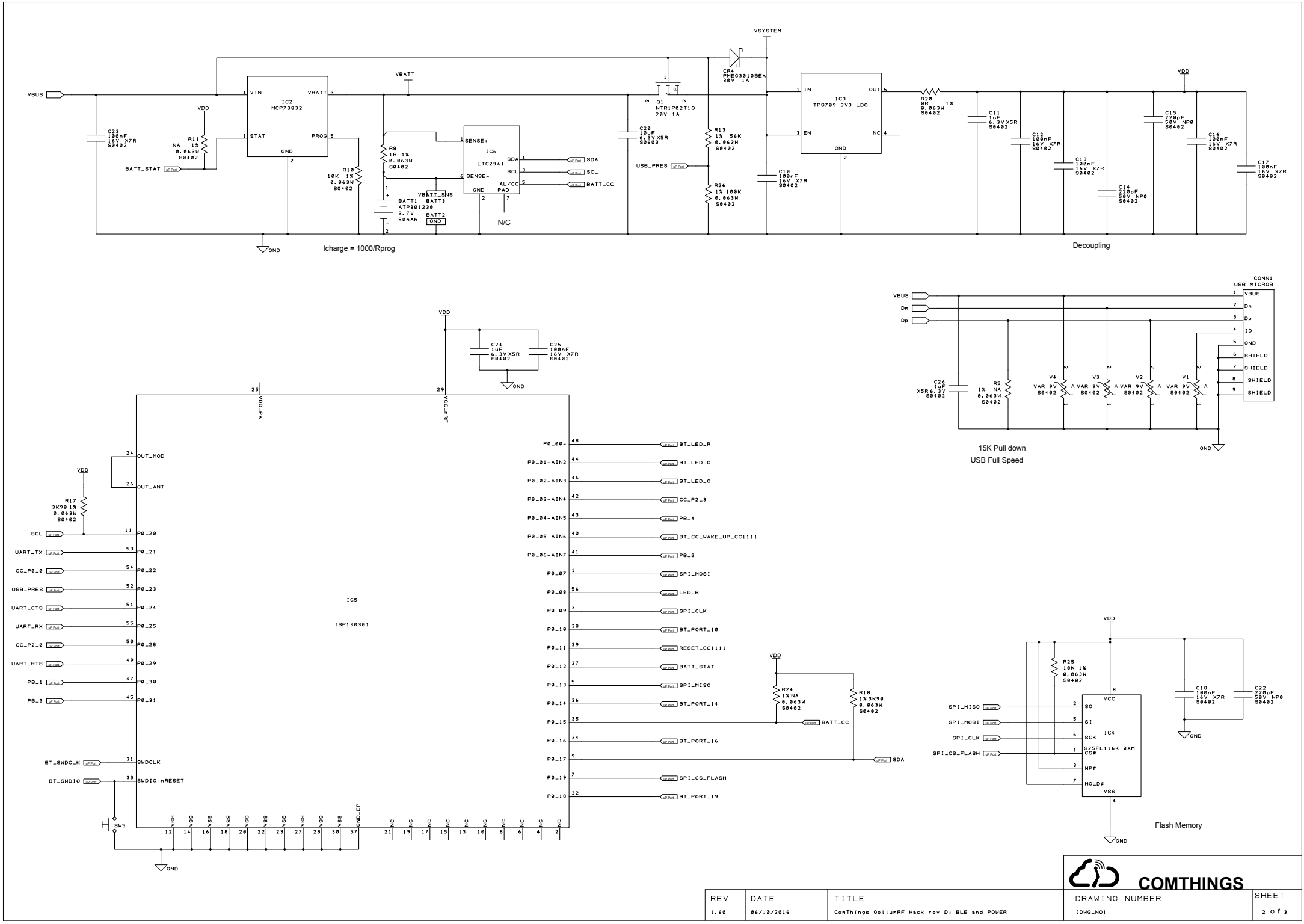


| REV | DATE | TITLE | DRAWING NUMBER | SHEET |
|---|---|---|---|---|
| 1.60 | 06/10/2016 | ComThings GoliumRF Hack rev D: BLE and POWER | [DWG_NO] | 2 of 3 |

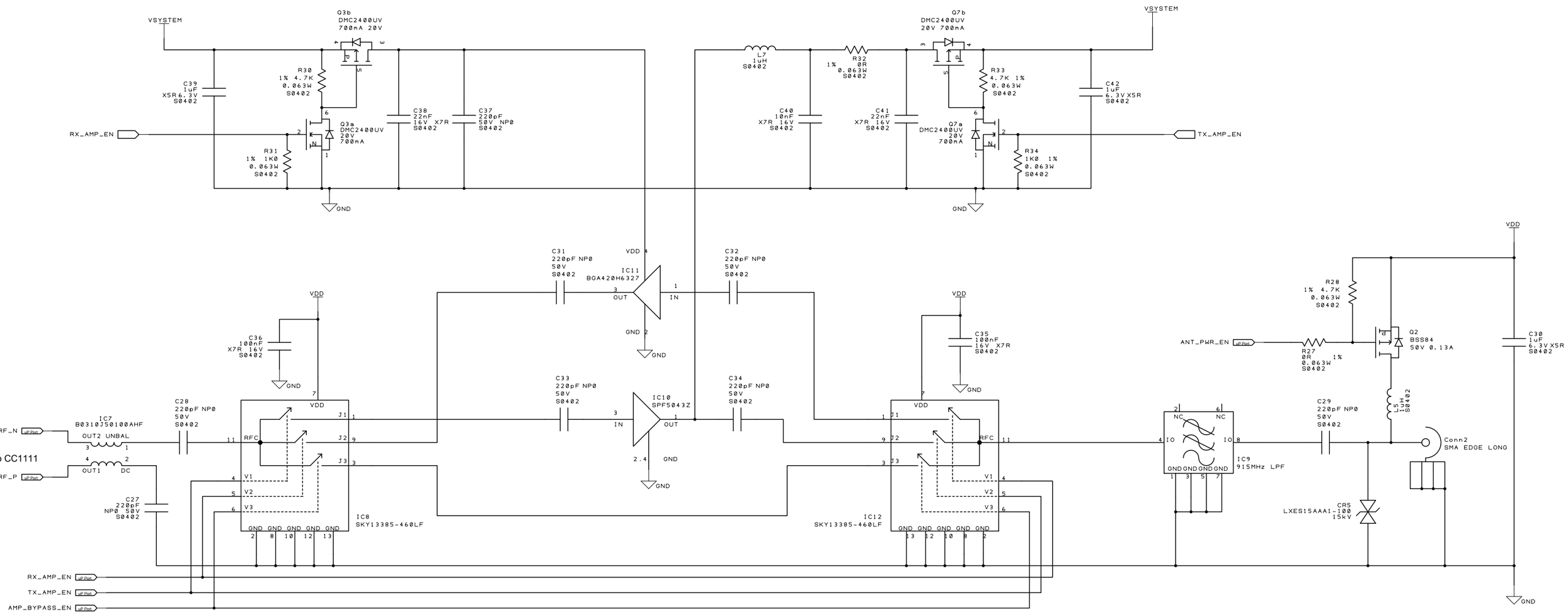


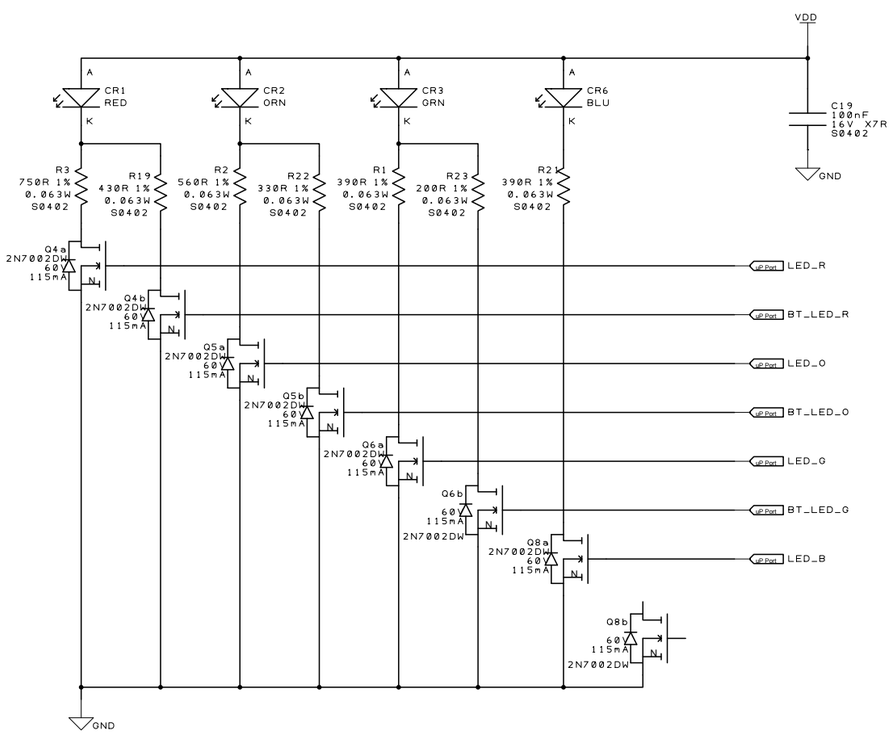


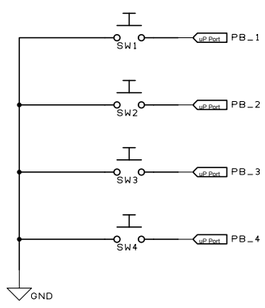


Main Push Buttons

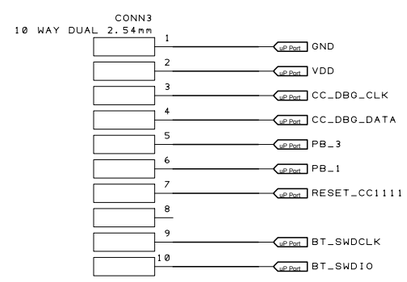


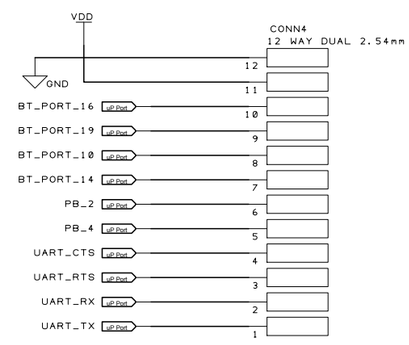


Debug and programming connector

COMTHINGS

| REV | DATE | TITLE | DRAWING NUMBER | SHEET |
|---|---|---|---|---|
| 1.60 | 06/10/2016 | ComThings GollumRF Hack rev D: INTERFACES | [DWG_NO] | 3 of 3 |