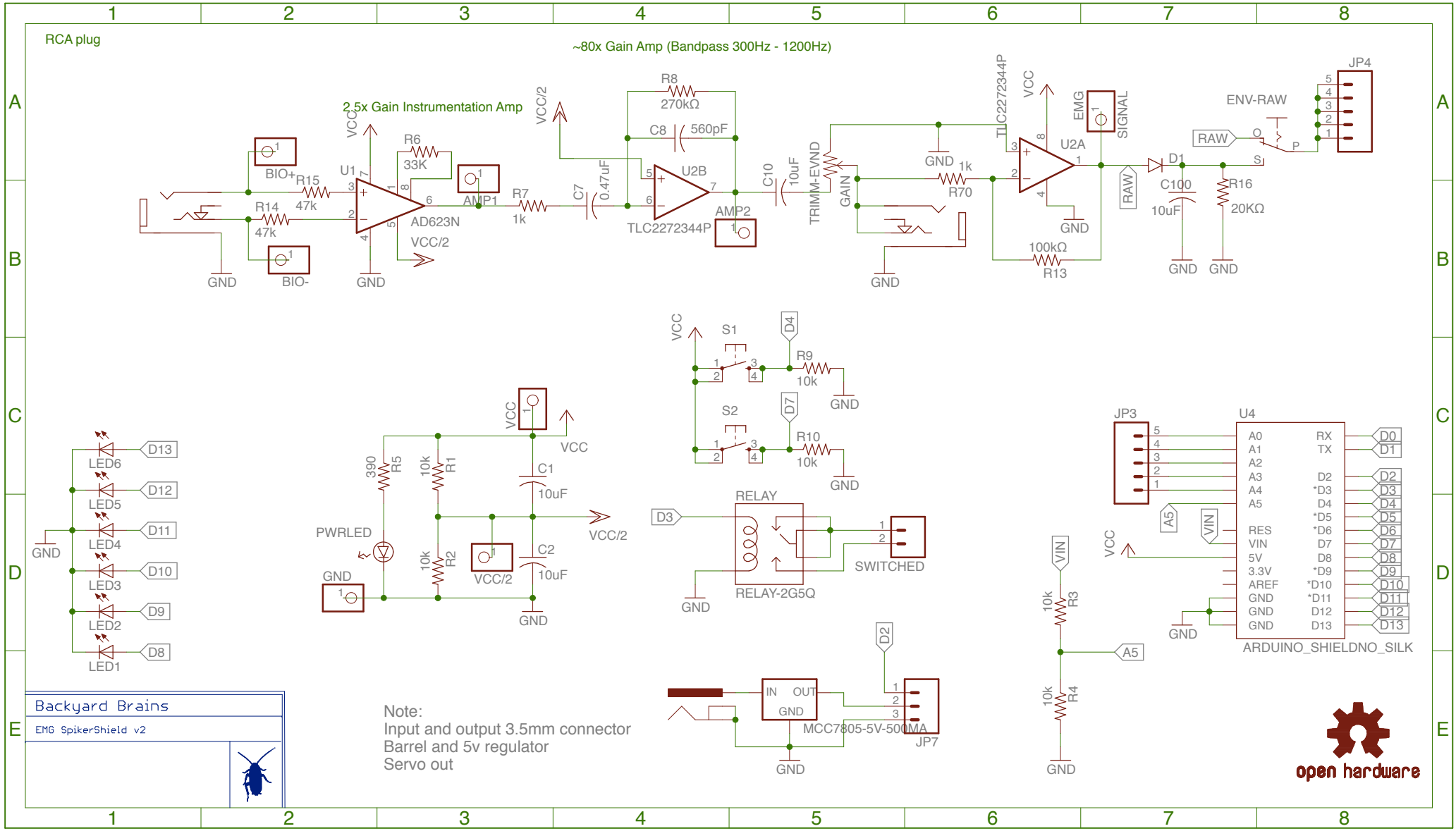
RCA plug
~80x Gain Amp (Bandpass 300Hz - 1200Hz)
2.5x Gain Instrumentation Amp
BIO+
BIO-
R15
47k
R14
47k
U1
AD623N
R6
33K
AMP1
R7
1k
C7
0.47uF
VCC/2
R8
270kΩ
C8
560pF
U2B
TLC2272344P
AMP2
C10
10uF
TRIMM-EVND
GAIN
R70
1k
TLC2272344P
U2A
100kΩ
R13
EMG
SIGNAL
RAW
D1
C100
10uF
R16
20KΩ
ENV-RAW
JP4
S1
S2
D4
D7
R9
10k
R10
10k
RELAY
RELAY-2G5Q
SWITCHED
D3
LED1
LED2
LED3
LED4
LED5
LED6
D8
D9
D10
D11
D12
D13
PWRLED
390
R5
10k
R1
10k
R2
C1
10uF
C2
10uF
JP3
U4
ARDUINO_SHIELDNO_SILK
A0
A1
A2
A3
A4
A5
RES
VIN
5V
3.3V
AREF
GND
RX
TX
D0
D1
D2
D3
D4
D5
D6
D7
D8
D9
D10
D11
D12
D13
A5
VIN
R3
10k
R4
10k
JP7
MCC7805-5V-500MA
IN
OUT
GND
Backyard Brains
EMG SpikerShield v2
Note:
Input and output 3.5mm connector
Barrel and 5v regulator
Servo out
open hardware