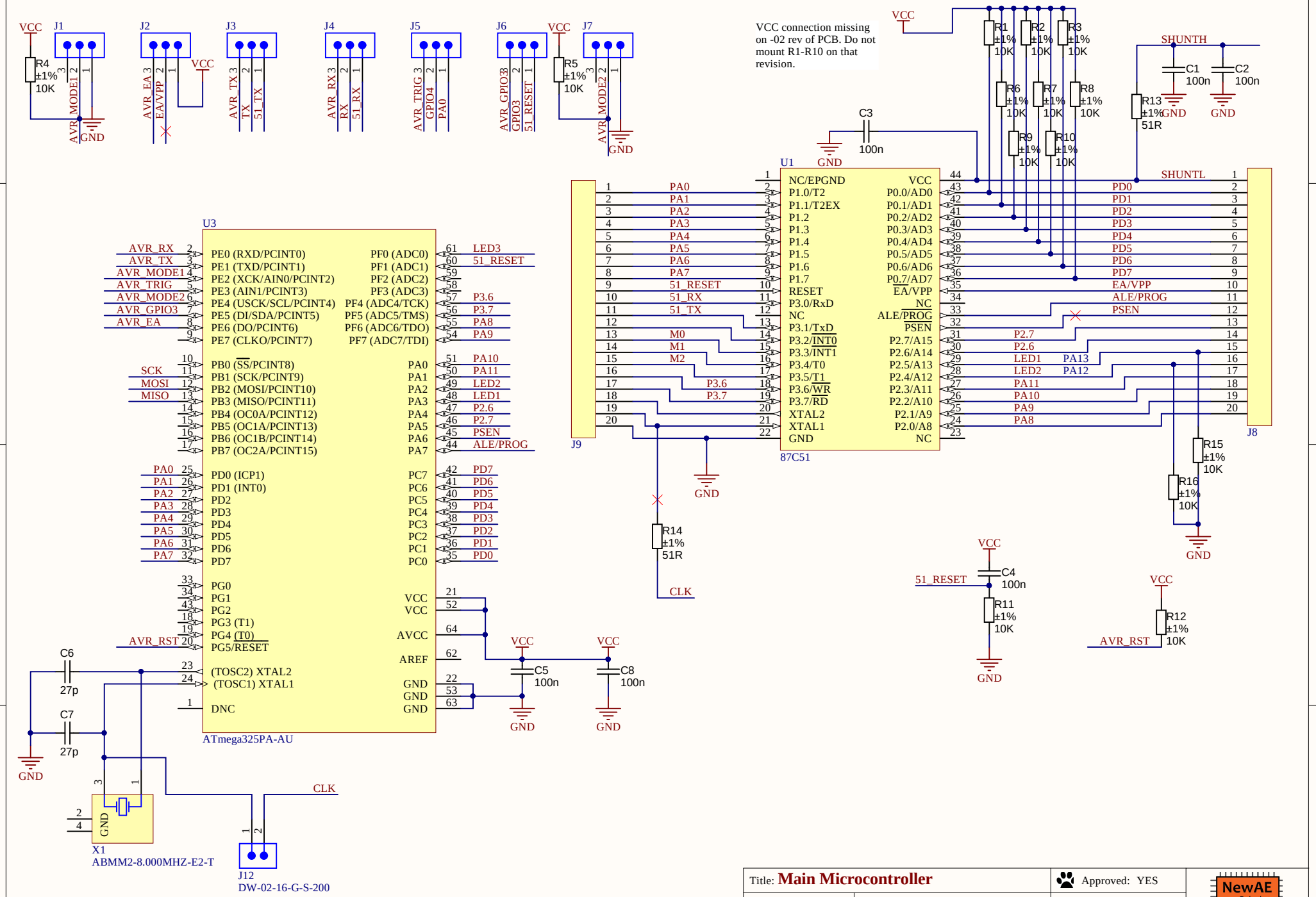

Title: **Main Microcontroller**		Approved: YES	NewAE Technology
Rev: 02	Project: NAE-CW308T-87C51	License: GPL	
Date: 01/02/2018	Time: 1:15:46 AM	Sheet of	Copyright © NewAE Technology Inc. NewAE.com
File: CW308T_87C51_CPU.SchDoc			

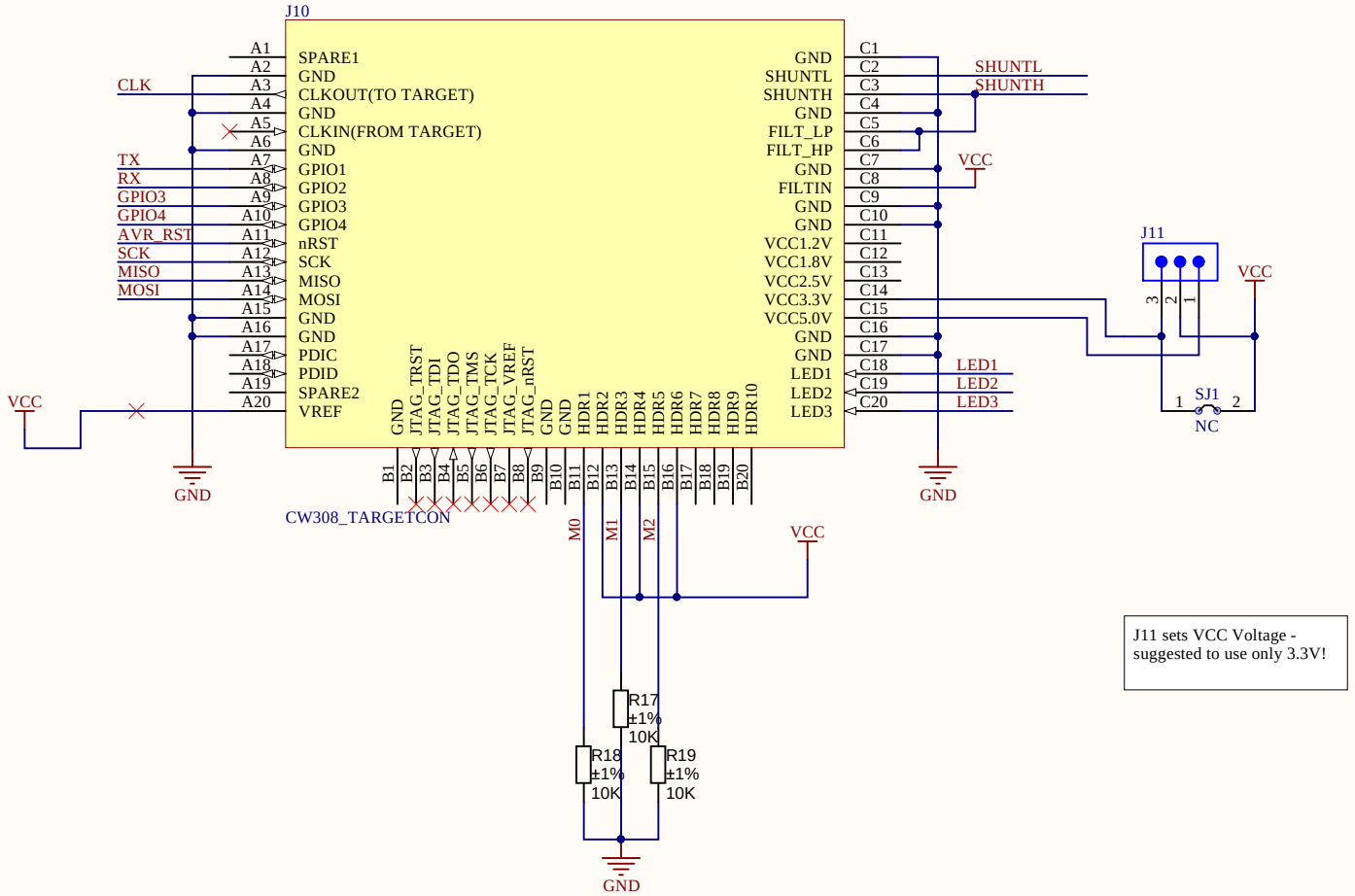

J11 sets VCC Voltage - suggested to use only 3.3V!

Title: **CW308 Connections**		Approved: YES	NewAE Technology
Rev: 02	Project: NAE-CW308T-87C51	License: GPL	
Date: 01/02/2018 Time: 1:15:47 AM	Sheet of	Copyright © NewAE Technology Inc.	NewAE.com
File: CW308T_87C51_CWCONN.SchDoc			