DATE	REVISION	ECN	REV	BY
04/21/14	Added to SourceForge Repository			RGB
04/25/14	Pre-Release to Prototype		A	RGB
05/28/14	Release for Review		B	RGB

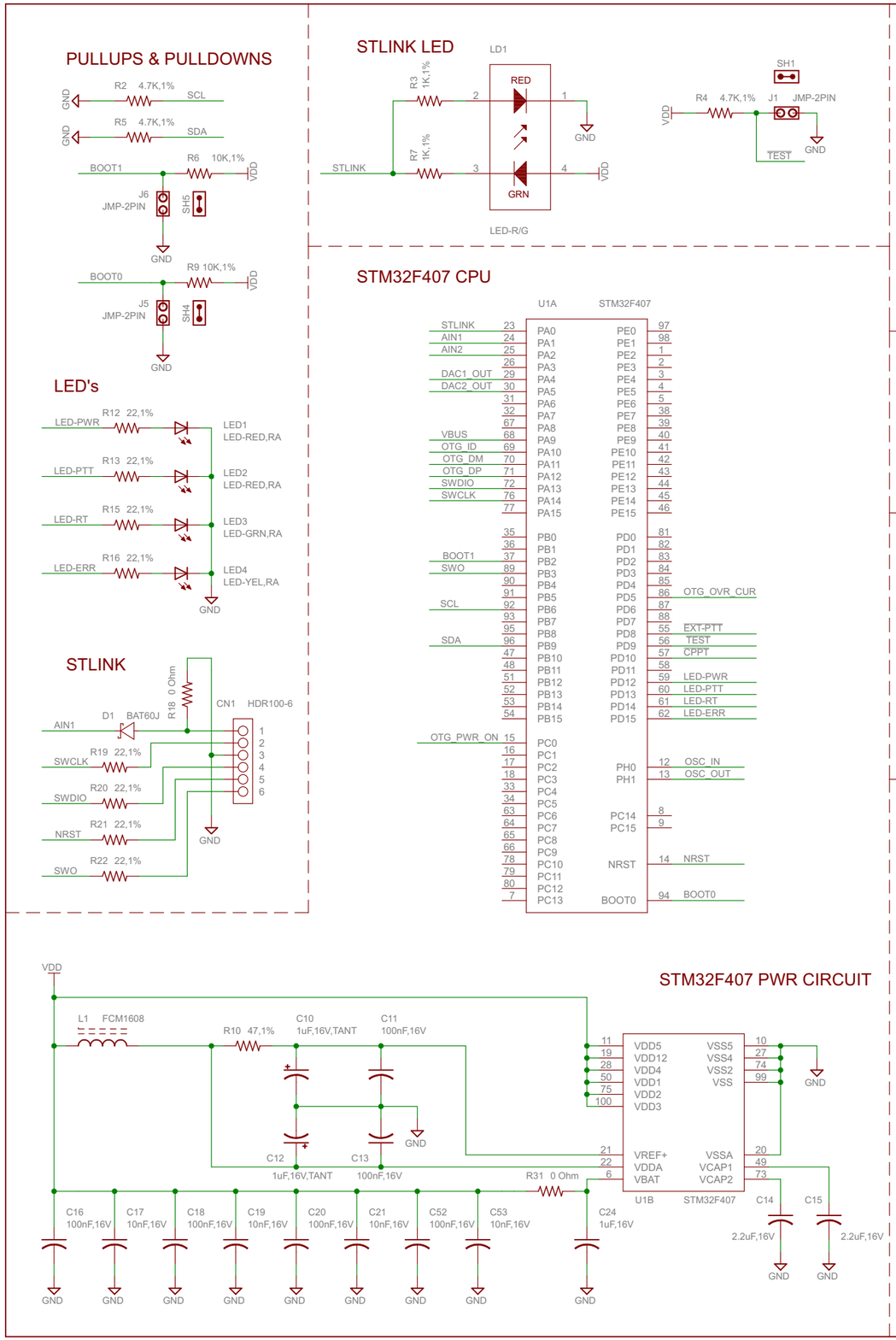

Add RC & L filtering to I/O & PS
CHANGE LED VALUES IN BOM DB

PCB1
SM1000A
PRINTED CIRCUIT BOARD

Copyright 2014 Richard Barnich and David Rowe
Licensed Under the TAPR Open Hardware License(www.tapr.org/OHL)

ROWETEL

TITLE: SmartMic Circuit Board

Document Number: SM1000-2L REV: B

Date: 5/28/2014 10:08:40 PM Sheet: 1/2

DATE	REVISION	ECN	REV	BY
04/21/14	Added to SourceForge Repository			RGB
04/25/14	Pre-Release to Prototype		A	RGB
05/28/14	Release for Review		B	RGB

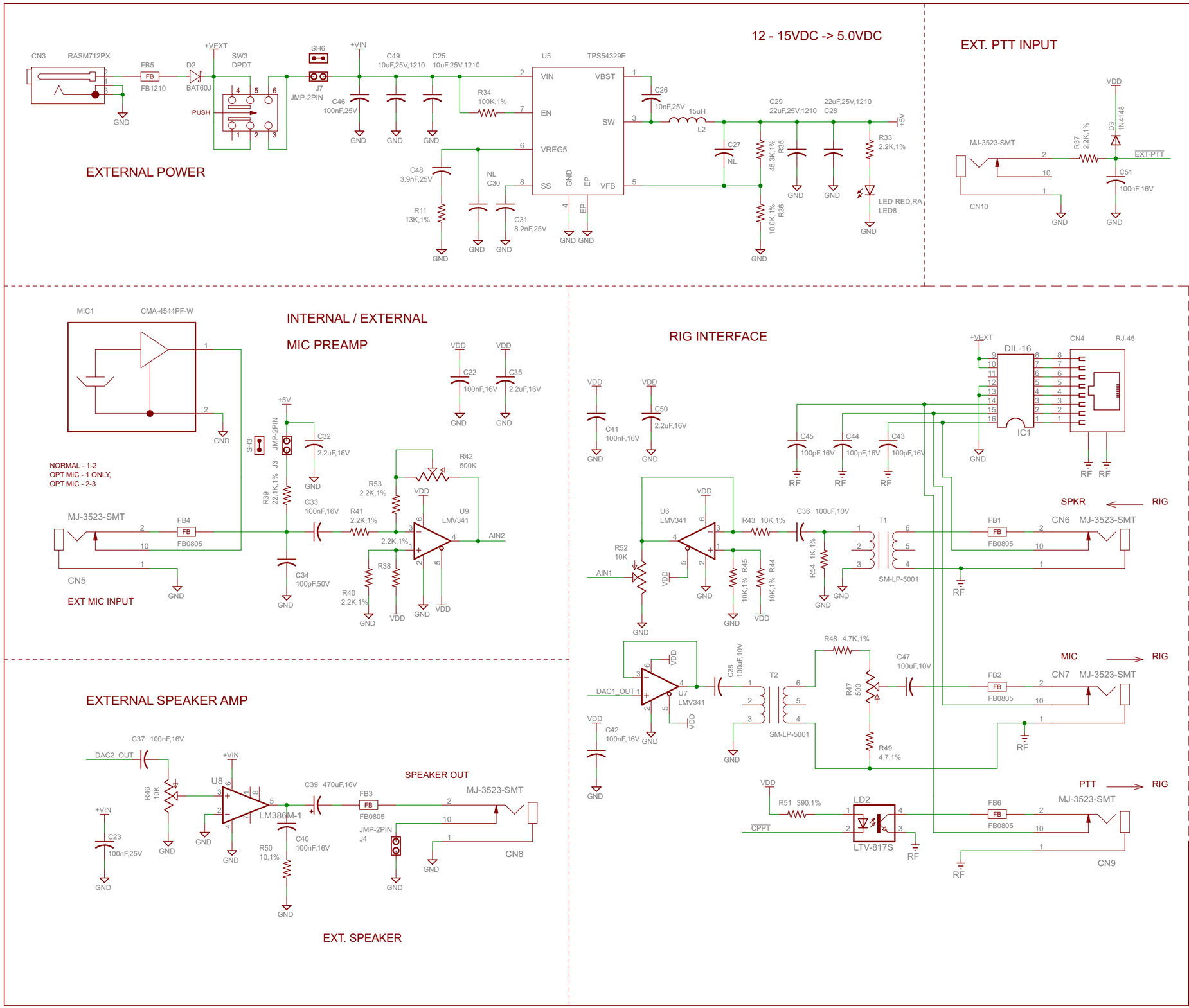

05/28/2014

13. Added jumpers to boot0 and boot1 to permit DFU mode for new image write and STLINK operation
12. Change C23 to 25V.
11. Change C43, C44, C45 to 100pF
10. Add hdr for speaker.
9. Change bypass caps to mix of 100nF and 10nF.
8. Change processor from STM32F407 to STM32F405.
7. Change PCB from 4 layer to 2 layer.
6. Bring GND, RF(GND) & +VEXT to IC1 connector.
5. Add ext. PTT connector and cpu DI.
4. Change mic preamp circuit to op-amp per DR.
3. Change rig mic amp circuit to pot on transformer output.
2. Move LED8 to 5V
1. Change U5 TPS54329E to RT8250

Copyright 2014 Richard Barnich and David Rowe
Licensed Under the TAPR Open Hardware License(www.tapr.org/OHL)

ROWETEL

TITLE: Smart Mic Circuit Board

Document Number: SM1000-2L

REV: B

Date: 5/28/2014 10:08:40 PM

Sheet: 2/2