DATE	REVISION	ECN	REV	BY
04/21/14	Added to SourceForge Repository			RGB

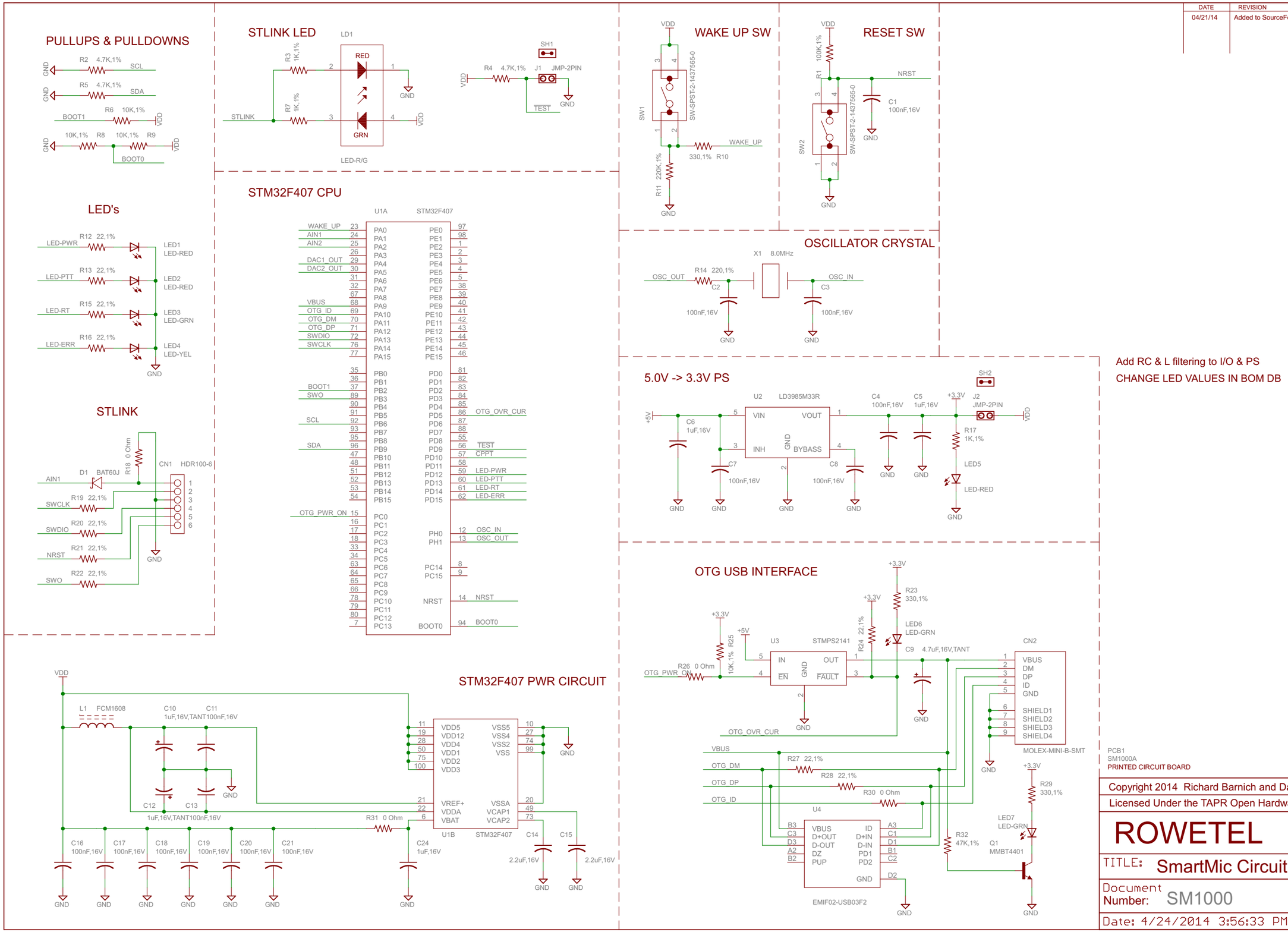

Copyright 2014 Richard Barnich and David Rowe
Licensed Under the TAPR Open Hardware License(www.tapr.org/OHL)

ROWETEL

TITLE: SmartMic Circuit Board

Document Number: SM1000 REV: .2

Date: 4/24/2014 3:56:33 PM Sheet: 1/2

DATE	REVISION	ECN	REV	BY

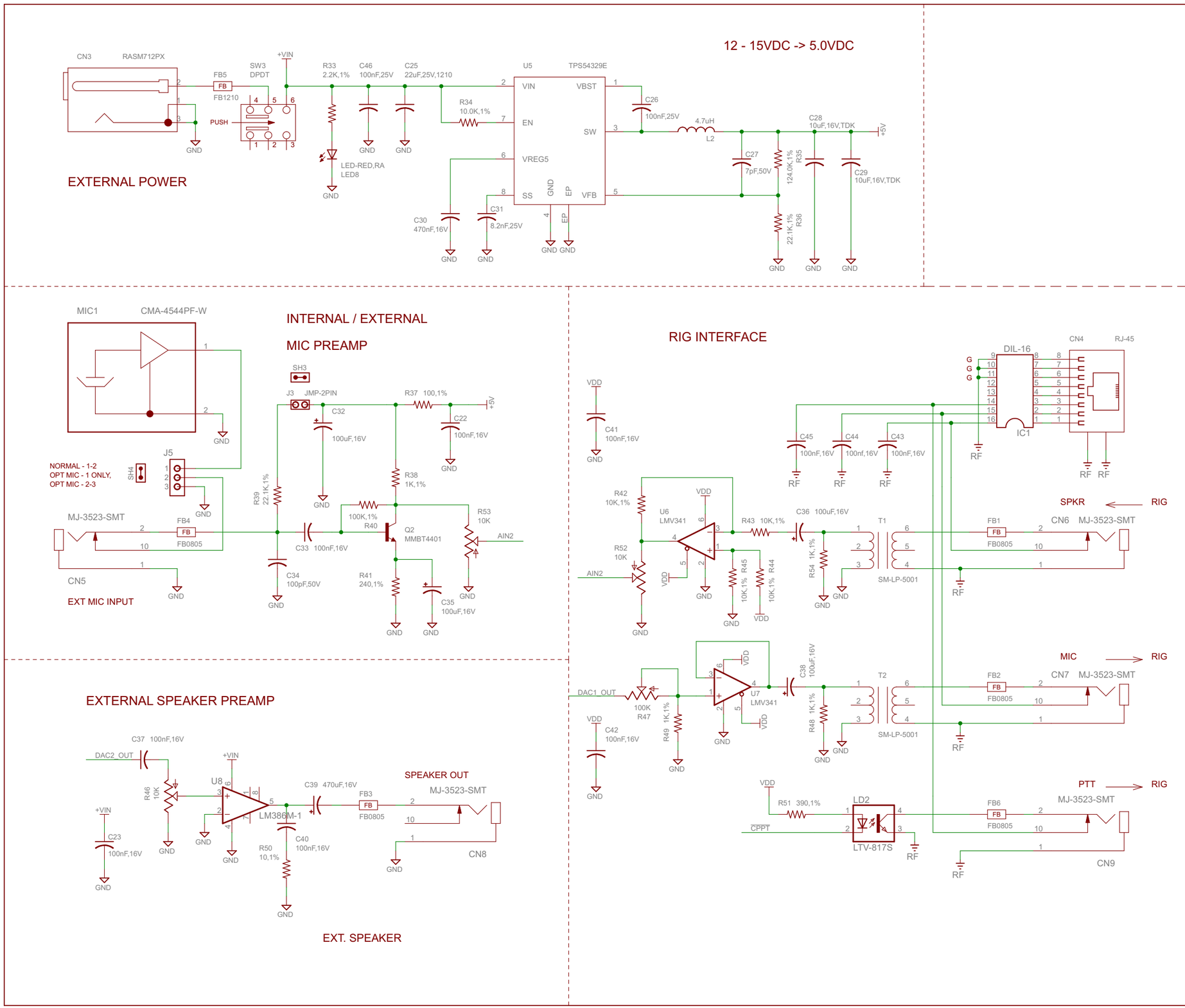

Copyright 2014 Richard Barnich and David Rowe
Licensed Under the TAPR Open Hardware License(www.tapr.org/OHL)

ROWETEL

TITLE: Smart Mic Circuit Board

Document Number: SM1000

REV: .2

Date: 4/24/2014 3:56:33 PM

Sheet: 2/2