DATE	REVISION	ECN	REV	BY
04/21/14	Added to SourceForge Repository			RGB
04/25/14	Pre-Release to Prototype		A	RGB
05/28/14	Release for Review		B	RGB
06/13/14	Release for Prototype		B	RGB

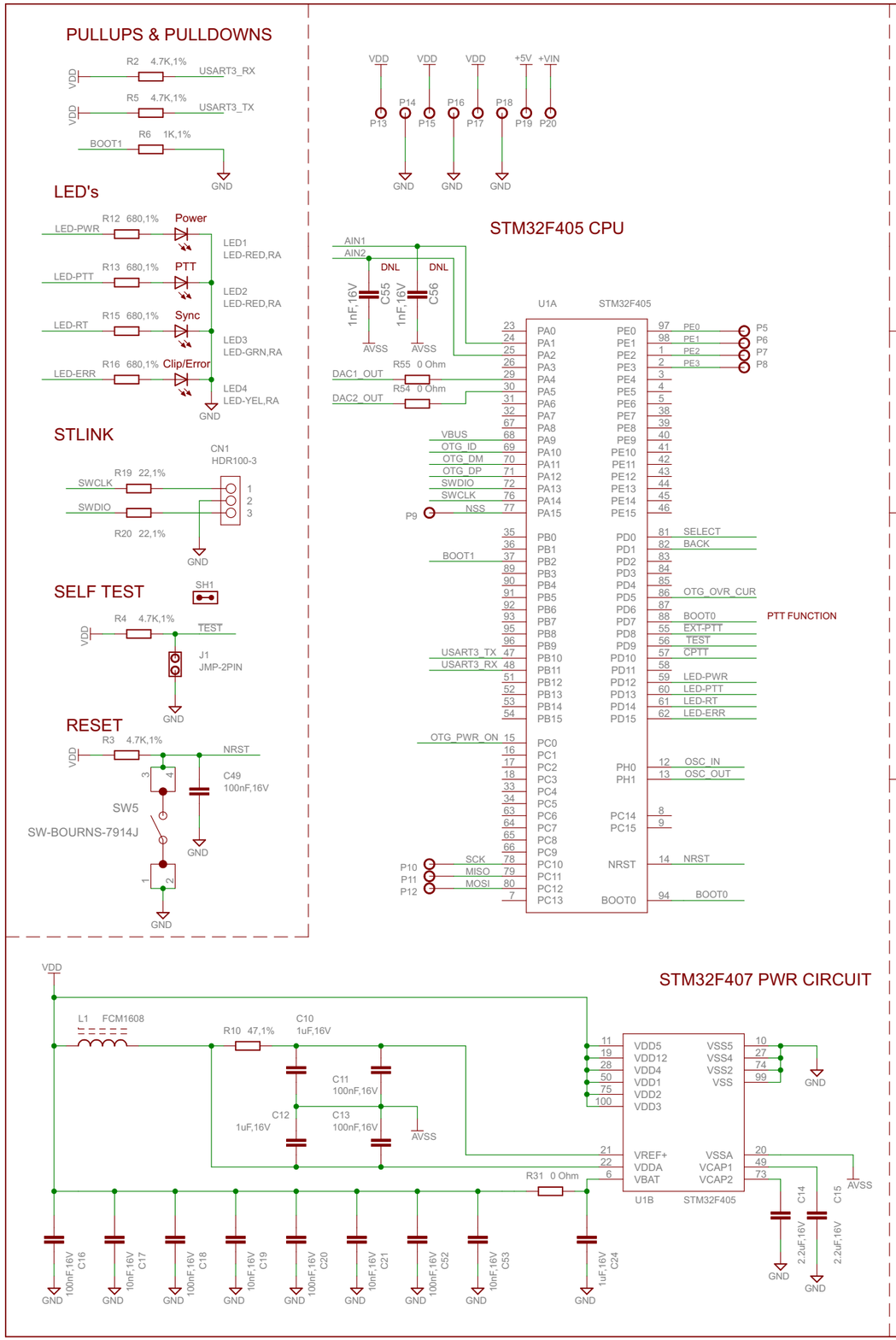

Note: All non-polarized capacitors packages are 0603 unless otherwise noted.
Note: All resistor packages are 0603 unless otherwise noted.

PCB1
SM1000A
PRINTED CIRCUIT BOARD

Copyright 2014 Richard Barnich and David Rowe
Licensed Under the TAPR Open Hardware License(www.tapr.org/OHL)

ROWETEL

TITLE: SmartMic Circuit Board

Document Number: SM1000-C REV: B

Date: 9/26/2014 3:14:59 PM Sheet: 1/2

DATE	REVISION	ECN	REV	BY
04/21/14	Added to SourceForge Repository			RGB
04/25/14	Pre-Release to Prototype		A	RGB
05/28/14	Release for Review		B	RGB
06/13/14	Release for Prototype		B	RGB

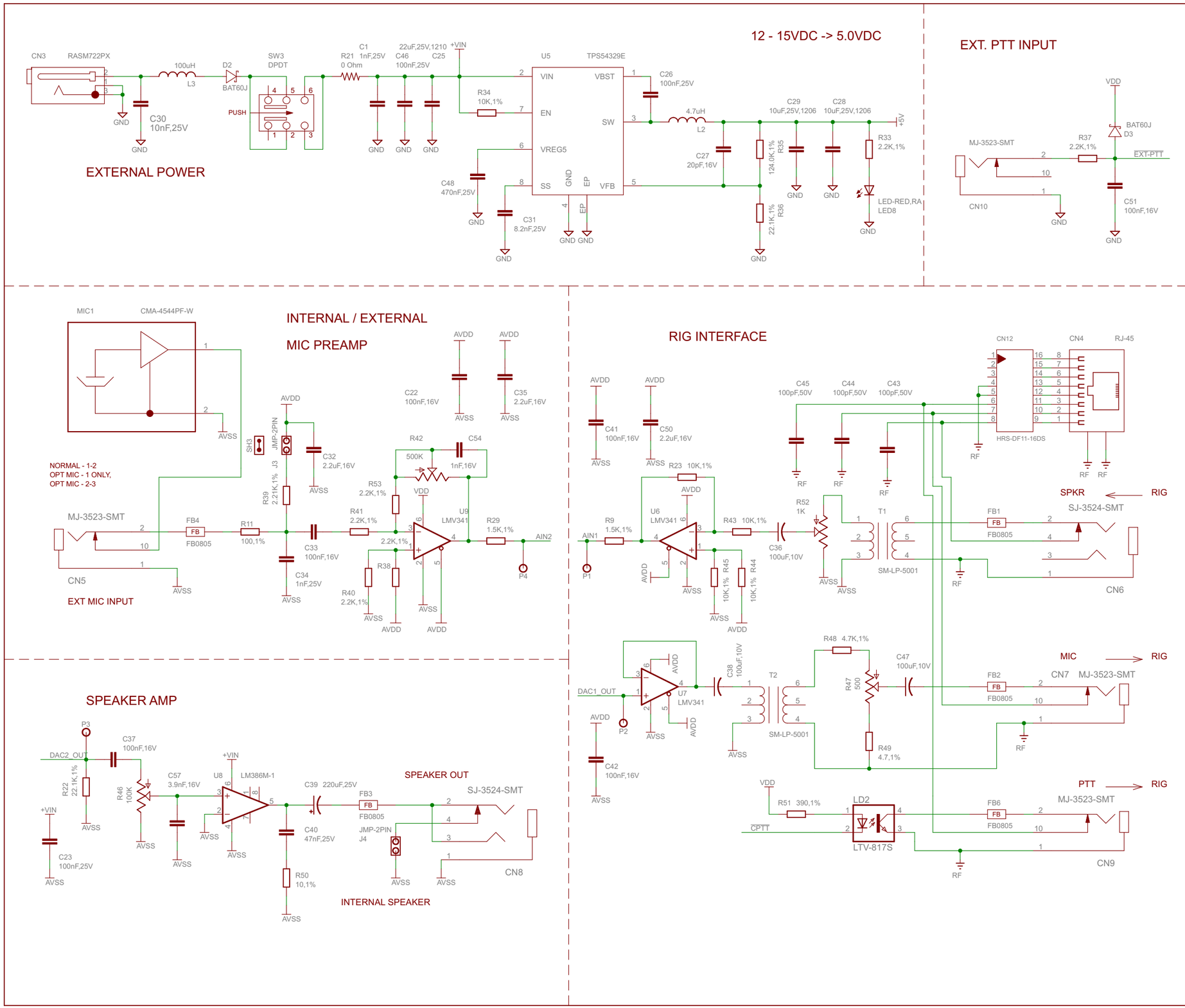

Copyright 2014 Richard Barnich and David Rowe
Licensed Under the TAPR Open Hardware License(www.tapr.org/OHL)

ROWETEL

TITLE: Smart Mic Circuit Board

Document Number: SM1000-C

REV: B

Date: 9/26/2014 3:14:59 PM

Sheet: 2/2