DATE	REVISION	ECN	REV	BY
11/23/14	SM1000-C -> SM1000-D		D	RGB
01/13/15	Change SW1 to MULTICOMP SPDT		D	RGB
01/13/15	FIX TS-026 FOOTPRINT		D	RGB
01/13/15	CHANGE R42,R47 & R52 TO TYPE 3361		D	RGB
01/13/15	MOVE USB CONN 1MM TOWARDS EDGE		D	RGB
01/13/15	MOVE SW3,4 TO EDGE		D	RGB
01/13/15	SHOW SH1 POSITION		D	RGB
01/13/15	ADD MISC. PARTS TO BOM		D	RGB
01-23-15	RELEASE REV. D TO PRODUCTION		D	RGB
05/19/15	CHANGE PARTS SW1, SW3 & J4		E	RGB
05/20/15	CHANGE LED COLORS FOR LED1 , LED4		E	RGB
05/27/15	DNL LED5,R17,LED8,R33		E	RGB
06/01/15	ADD D1,D3,D4,D5,D6,D7,D8 TSV		E	RGB
06/05/15	RELEASE TO PRODUCTION		E	RGB
06/27/15	CHANGE CIRCUITRY FOR CN8		E	RGB

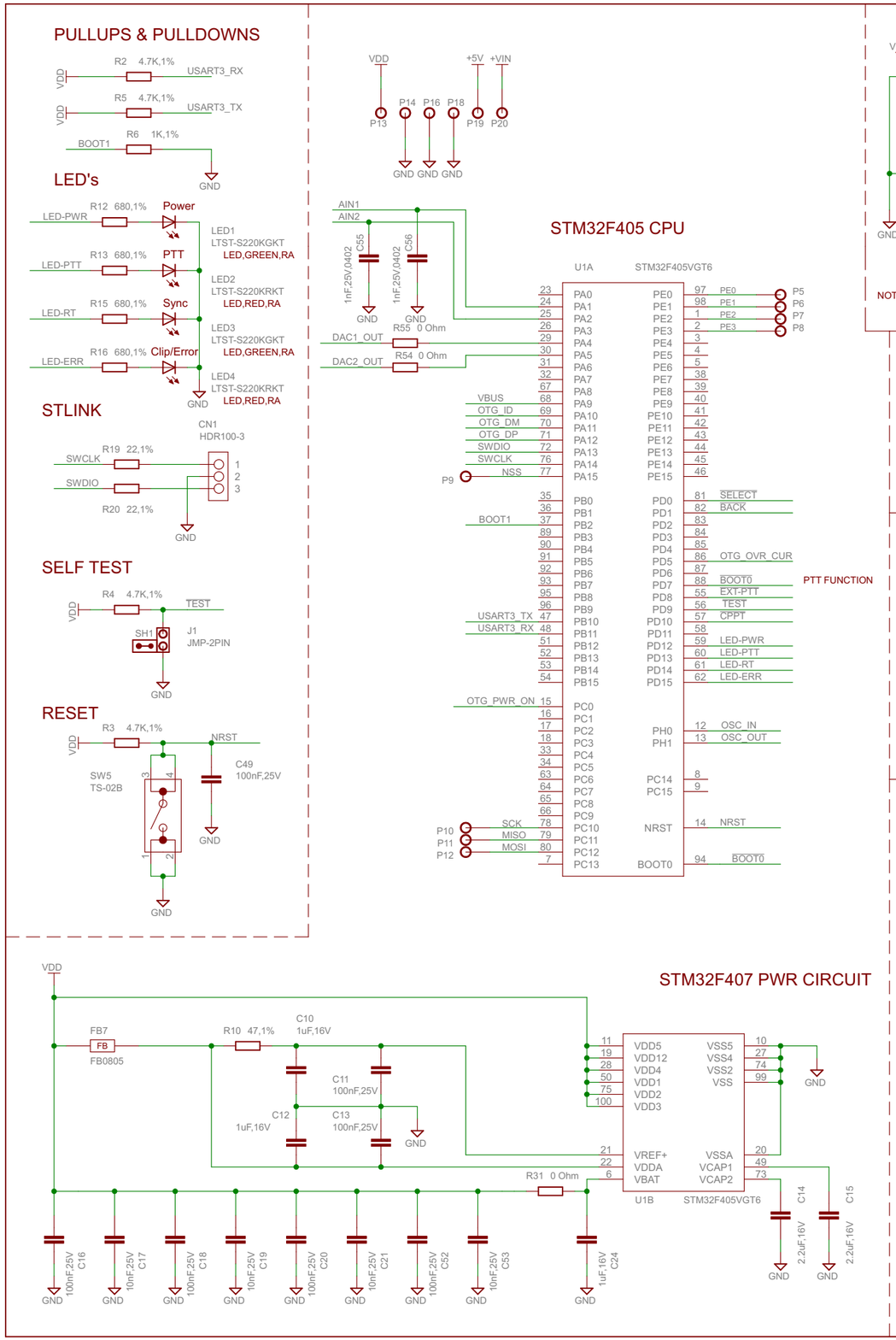

MISC. PARTS

SPKR1
SPKR-HY4004M-001

PCB1
SM1000D
PRINTED CIRCUIT BOARD

Copyright 2014 Richard Barnich and David Rowe
Licensed Under the TAPR Open Hardware License(www.tapr.org/OHL)

ROWETEL

TITLE: SmartMic Circuit Board

Document Number: SM1000-E

REV: E

Date: 6/26/2015 1:59:24 PM

Sheet: 1/2

DATE	REVISION	ECN	REV	BY
01/14/15	SM1000-C -> SM1000-D		D	RGB
01/23/15	RELEASE REV. D TO PRODUCTION.		D	RGB
06/05/15	NOTE: SEE PAGE 1 FOR CHANGES		E	RGB
06/05/15	RELEASE TO PRODUCTION		E	RGB
06/26/15	CHANGE CIRCUITRY TO FIX CN8 PROBLEM		E	RGB

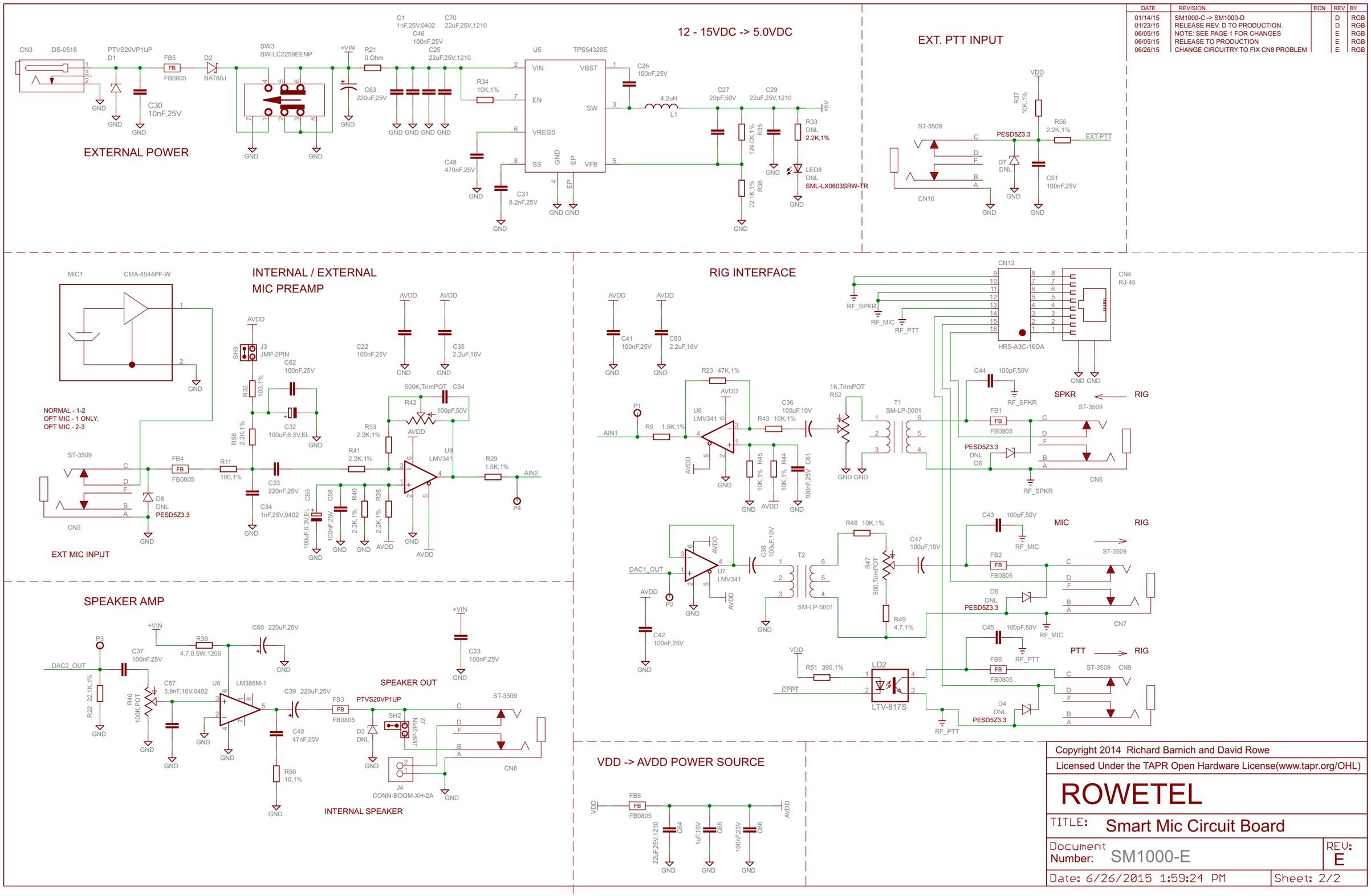

Copyright 2014 Richard Barnich and David Rowe
Licensed Under the TAPR Open Hardware License(www.tapr.org/OHL)

ROWETEL

TITLE: Smart Mic Circuit Board

Document Number: SM1000-E

REV: E

Date: 6/26/2015 1:59:24 PM

Sheet: 2/2