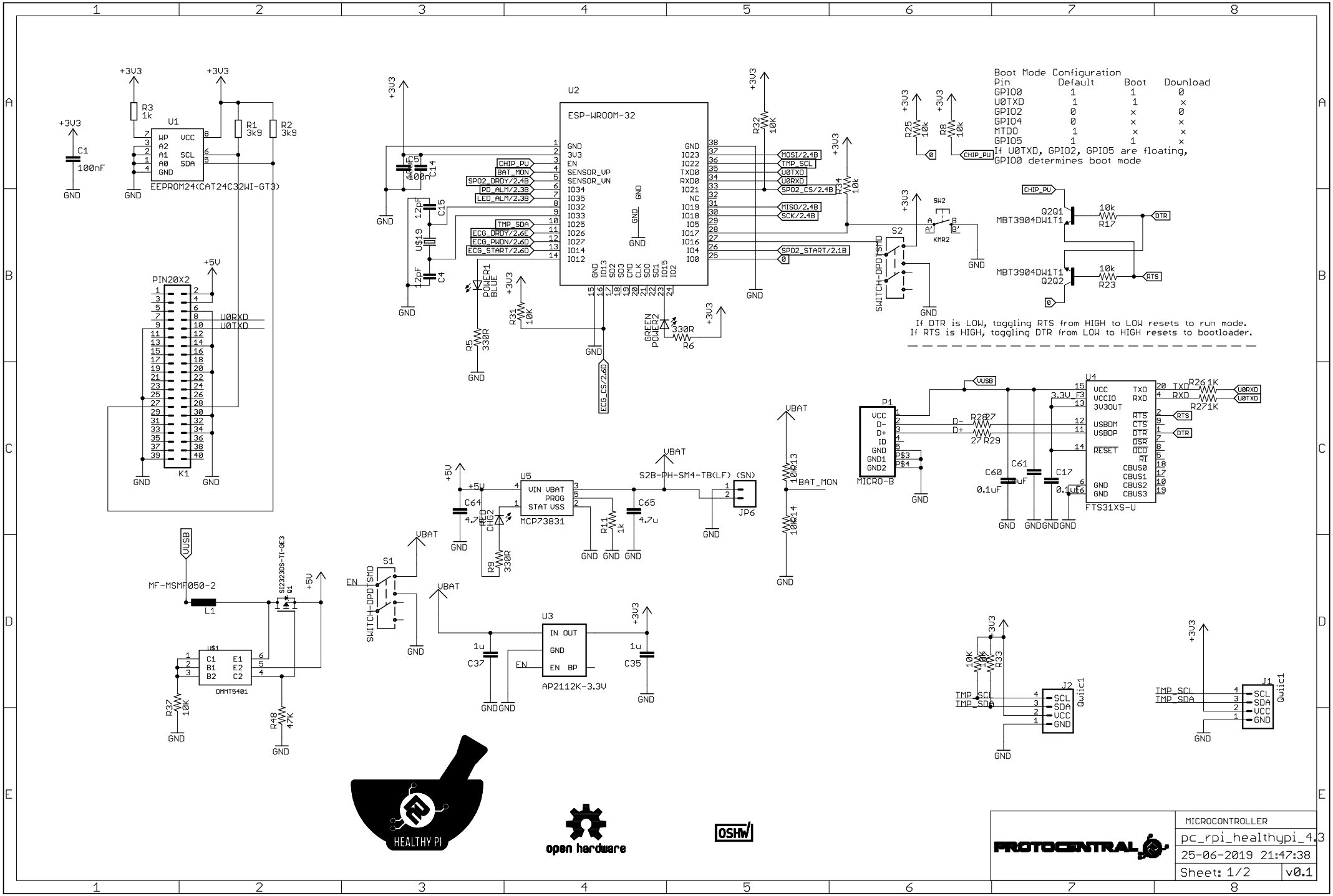

11-03-2020 11:46:13 f=0.73 C:\Users\manik\Circuitects Dropbox\mani kandan\ces-shared\pcb\active\pc_rpi_healthypi4.3\pc_rp

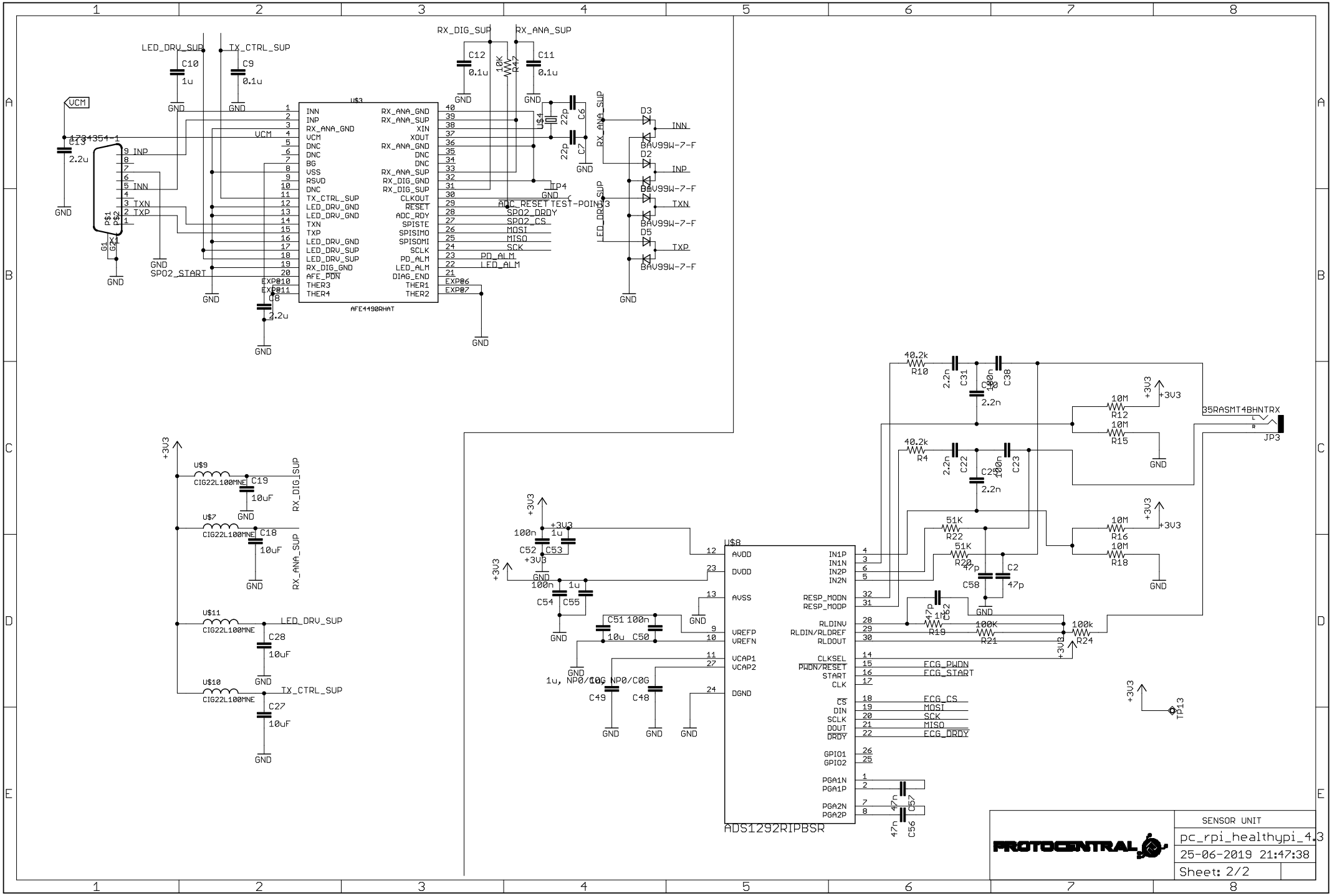

SENSOR UNIT

pc_rpi_healthypi_4.3

25-06-2019 21:47:38

Sheet: 2/2