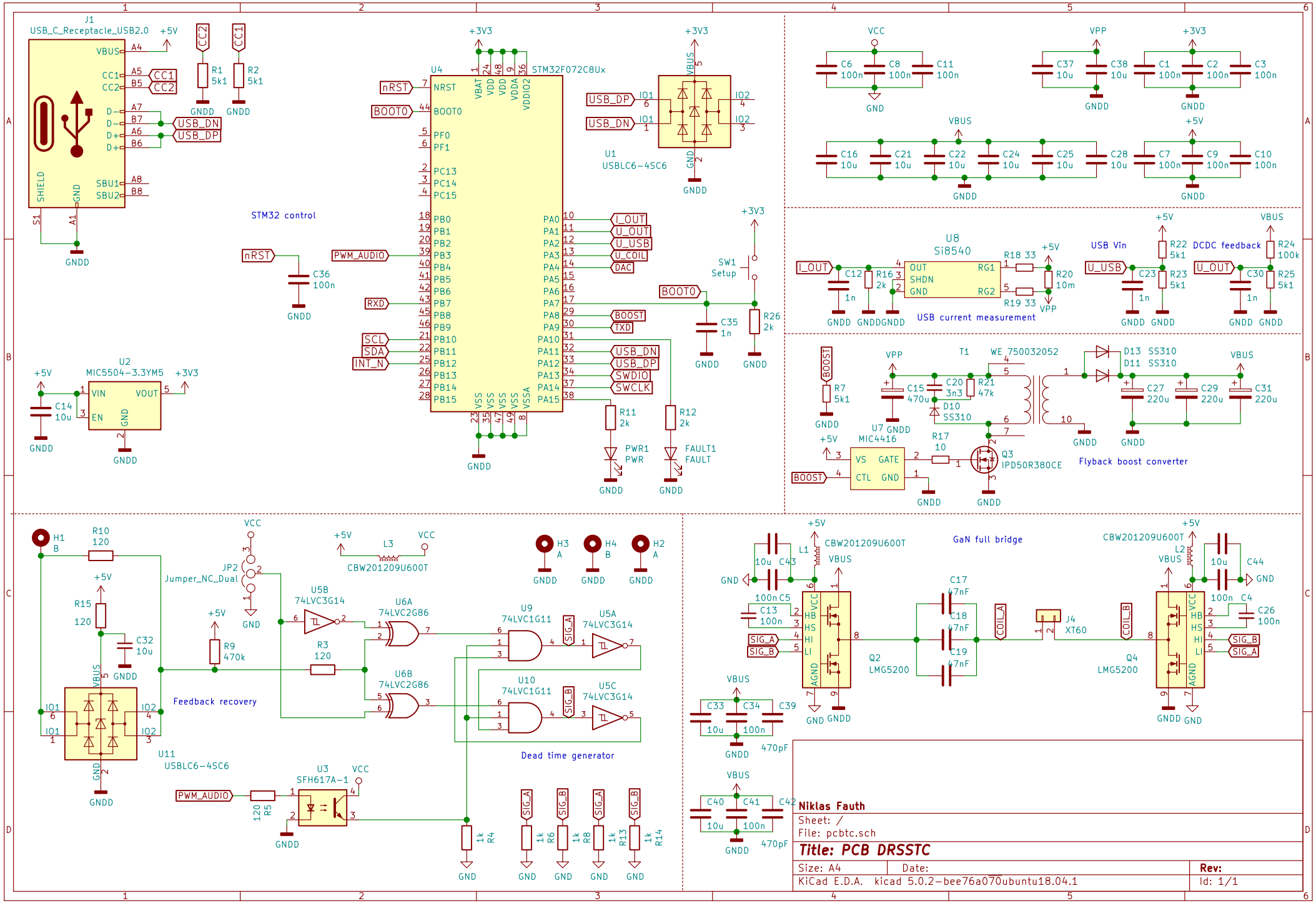
J1
USB_C_Receptacle_USB2.0
+5V
VBUS
CC1
CC2
D-
D+
SBU1
SBU2
SHIELD
GND
S1
A1
USB_DN
USB_DP
R1 5k1
R2 5k1
GNDD
U4
STM32F072C8Ux
+3V3
VBAT
VDD
VDDA
VDDIO2
NRST
BOOT0
PF0
PF1
PC13
PC14
PC15
PB0
PB1
PB2
PB3
PB4
PB5
PB6
PB7
PB8
PB9
PB10
PB11
PB12
PB13
PB14
PB15
VSS
VSSA
PA0
PA1
PA2
PA3
PA4
PA5
PA6
PA7
PA8
PA9
PA10
PA11
PA12
PA13
PA14
PA15
I_OUT
U_OUT
U_USB
U_COIL
DAC
BOOST
TXD
SWDIO
SWCLK
PWM_AUDIO
RXD
SCL
SDA
INT_N
STM32 control
C36 100n
U1
USBLC6-4SC6
IO1
IO2
SW1
Setup
C35 1n
R26 2k
R11 2k
R12 2k
PWR1
PWR
FAULT1
FAULT
U2
MIC5504-3.3YM5
VIN
VOUT
EN
C14 10u
+3V3
VCC
VPP
C6 100n
C8 100n
C11 100n
C37 10u
C38 10u
C1 100n
C2 100n
C3 100n
C16 10u
C21 10u
C22 10u
C24 10u
C25 10u
C28 10u
C7 100n
C9 100n
C10 100n
U8
Si8540
OUT
SHDN
RG1
RG2
R18 33
R19 33
R20 10m
C12 1n
R16 3 2k
USB current measurement
USB Vin
DCDC feedback
R22 5k1
R23 5k1
R24 100k
R25 5k1
C23 1n
C30 1n
R7 5k1
C15 470u
C20 3n3
R21 47k
D10 SS310
T1
WE 750032052
D13 SS310
D11 SS310
C27 220u
C29 220u
C31 220u
U7
MIC4416
VS
GATE
CTL
R17 10
Q3
IPD50R380CE
Flyback boost converter
H1 B
R10 120
R15 120
C32 10u
JP2
Jumper_NC_Dual
R9 470k
Feedback recovery
U11
USBLC6-4SC6
L3
CBW201209U600T
U5B
74LVC3G14
U6A
74LVC2G86
U6B
74LVC2G86
R3 120
U9
74LVC1G11
U10
74LVC1G11
U5A
74LVC3G14
U5C
74LVC3G14
SIG_A
SIG_B
Dead time generator
H3 A
H4 B
H2 A
U3
SFH617A-1
R5 120
R4 1k
R6 1k
R8 1k
R13 1k
R14 1k
L1
L2
C43 10u
C44 10u
C13 100n
C5 100n
C4 100n
C26 100n
Q2
LMG5200
Q4
LMG5200
C17 47nF
C18 47nF
C19 47nF
COIL_A
COIL_B
J4
XT60
C33 10u
C34 100n
C39 470pF
C40 10u
C41 100n
C42 470pF
Niklas Fauth
Sheet: /
File: pcbtc.sch
Title: PCB DRSSTC
Size: A4
Date:
Rev:
KiCad E.D.A. kicad 5.0.2-bee76a070ubuntu18.04.1
Id: 1/1