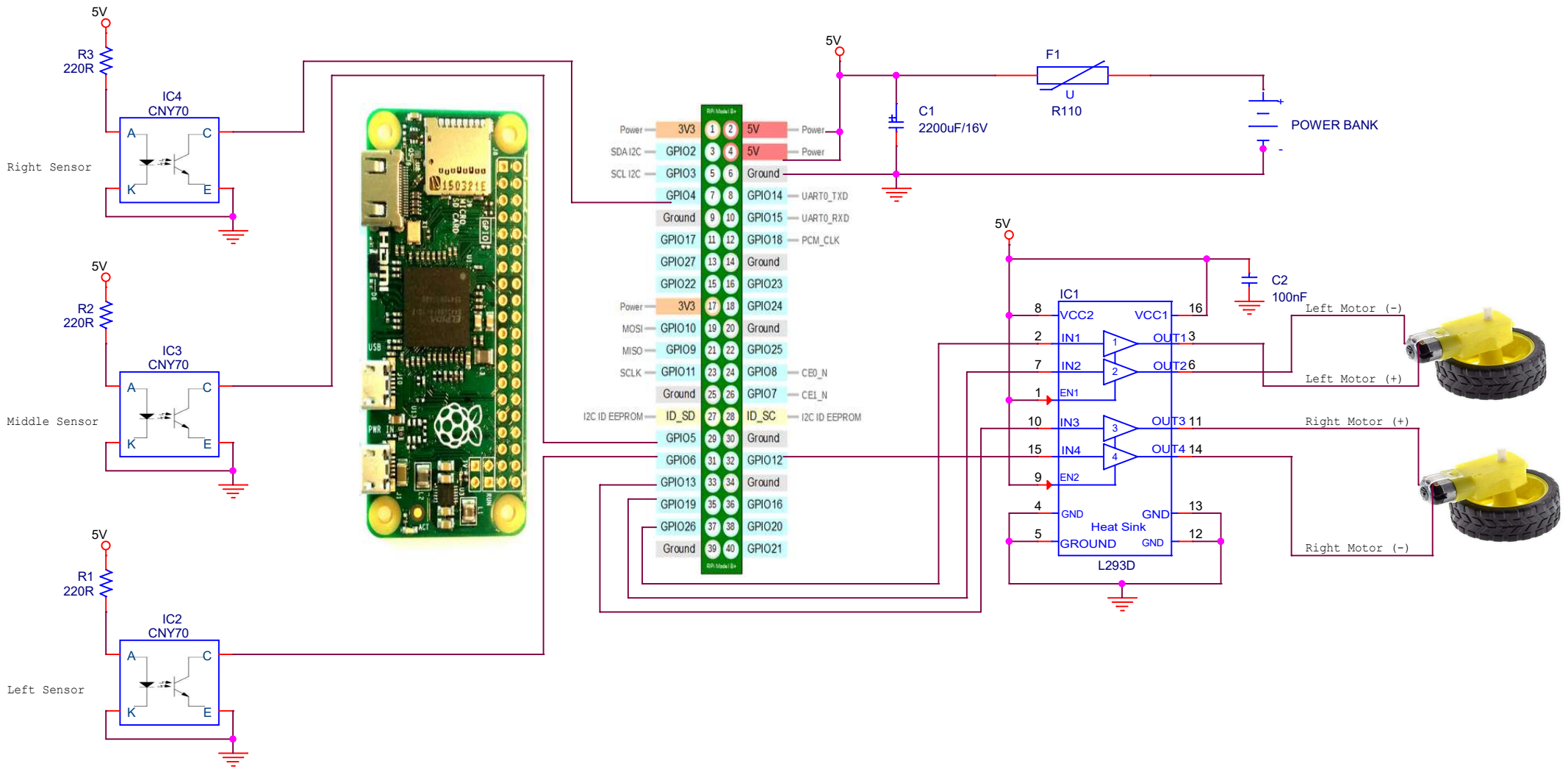

Title	Line Follower	
Size A4	Document Number Schematic	Rev 1.0
Date: Tuesday, March 19, 2019	Sheet 1 of 1	