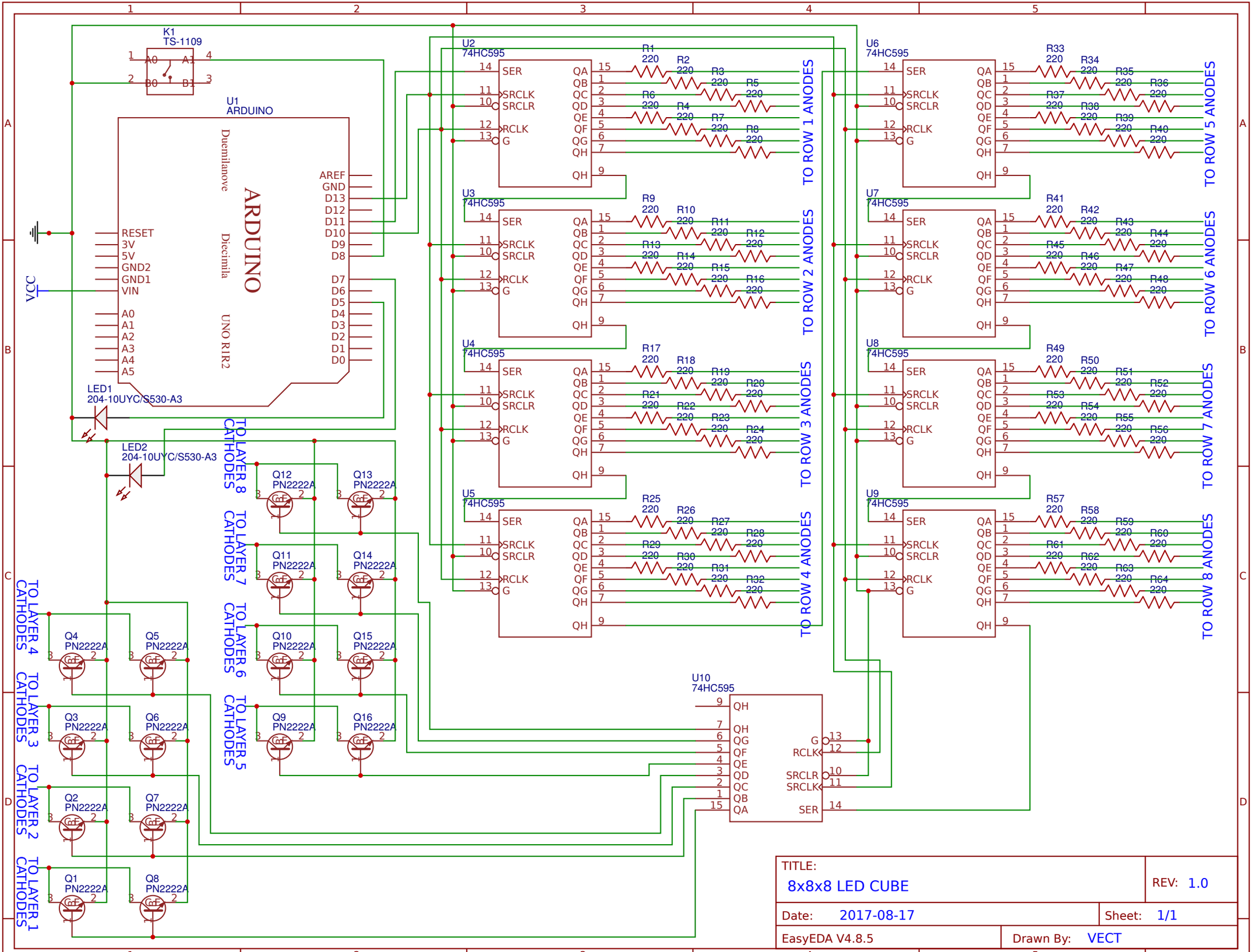
K1
TS-1109
U1
ARDUINO
Duemilanove
Diecimila
UNO R1R2
RESET
3V
5V
GND2
GND1
VIN
A0
A1
A2
A3
A4
A5
AREF
GND
D13
D12
D11
D10
D9
D8
D7
D6
D5
D4
D3
D2
D1
D0
VCC
LED1
204-10UYC/S530-A3
LED2
204-10UYC/S530-A3
U2
74HC595
U3
74HC595
U4
74HC595
U5
74HC595
U6
74HC595
U7
74HC595
U8
74HC595
U9
74HC595
U10
74HC595
SER
SRCLK
SRCLR
RCLK
G
QA
QB
QC
QD
QE
QF
QG
QH
TO ROW 1 ANODES
TO ROW 2 ANODES
TO ROW 3 ANODES
TO ROW 4 ANODES
TO ROW 5 ANODES
TO ROW 6 ANODES
TO ROW 7 ANODES
TO ROW 8 ANODES
TO LAYER 8 CATHODES
TO LAYER 7 CATHODES
TO LAYER 6 CATHODES
TO LAYER 5 CATHODES
TO LAYER 4 CATHODES
TO LAYER 3 CATHODES
TO LAYER 2 CATHODES
TO LAYER 1 CATHODES
Q1 PN2222A
Q2 PN2222A
Q3 PN2222A
Q4 PN2222A
Q5 PN2222A
Q6 PN2222A
Q7 PN2222A
Q8 PN2222A
Q9 PN2222A
Q10 PN2222A
Q11 PN2222A
Q12 PN2222A
Q13 PN2222A
Q14 PN2222A
Q15 PN2222A
Q16 PN2222A
TITLE:
8x8x8 LED CUBE
REV: 1.0
Date: 2017-08-17
Sheet: 1/1
EasyEDA V4.8.5
Drawn By: VECT