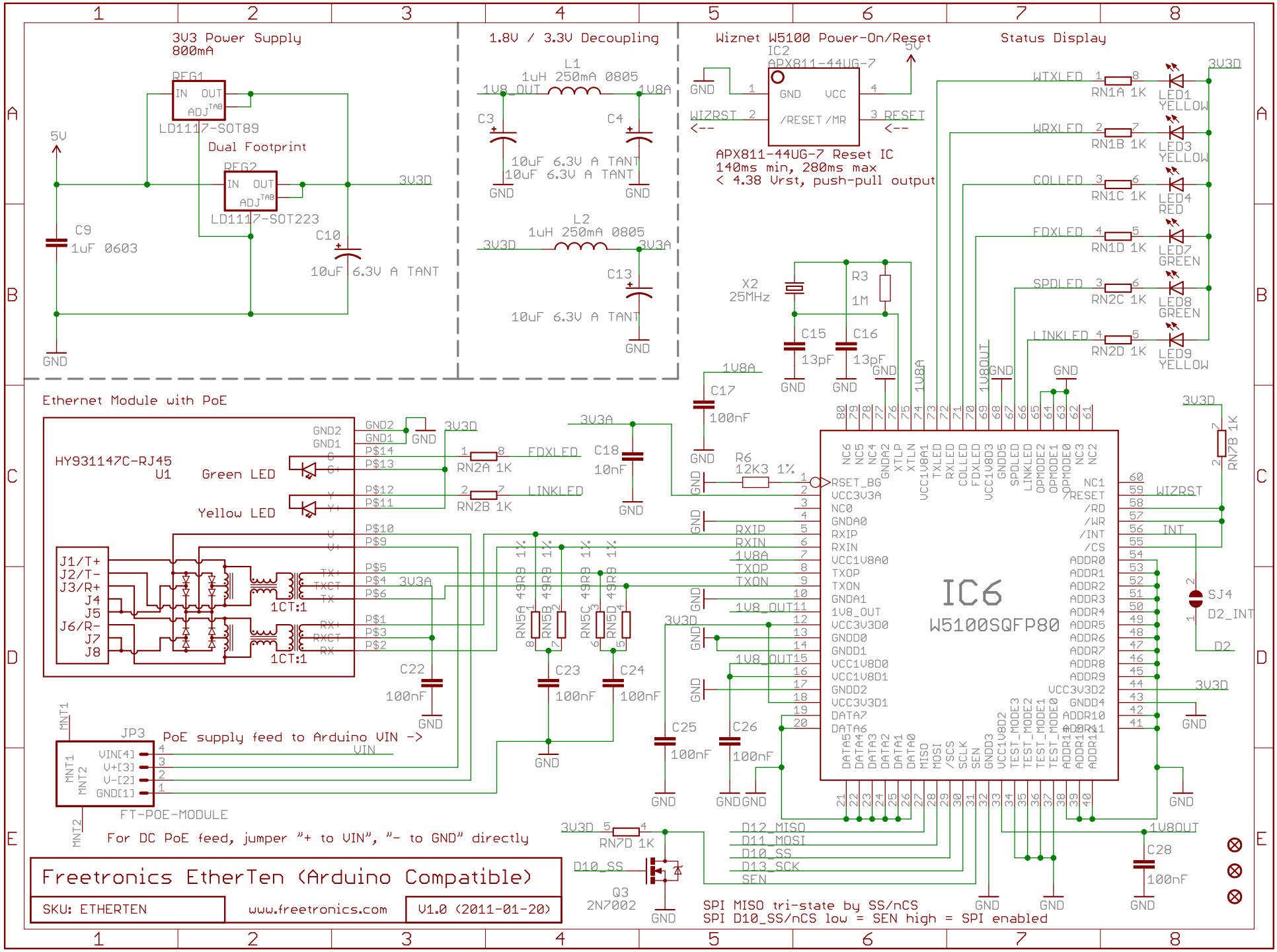
3V3 Power Supply
800mA
REG1
LD1117-SOT89
Dual Footprint
REG2
LD1117-SOT223
5V
3V3D
C9
1uF 0603
C10
10uF 6.3V A TANT
GND
1.8V / 3.3V Decoupling
L1
1uH 250mA 0805
1V8_OUT
1V8A
C3
C4
10uF 6.3V A TANT
10uF 6.3V A TANT
L2
1uH 250mA 0805
3V3A
C13
10uF 6.3V A TANT
Wiznet W5100 Power-On/Reset
IC2
APX811-44UG-7
WIZRST
RESET
APX811-44UG-7 Reset IC
140ms min, 280ms max
< 4.38 Vrst, push-pull output
Status Display
WTXLED
WRXLED
COLLED
FDXLED
SPDLED
LINKLED
RN1A 1K
RN1B 1K
RN1C 1K
RN1D 1K
RN2C 1K
RN2D 1K
LED1 YELLOW
LED3 YELLOW
LED4 RED
LED7 GREEN
LED8 GREEN
LED9 YELLOW
X2
25MHz
R3
1M
C15
13pF
C16
13pF
C17
100nF
R6
12K3 1%
C18
10nF
Ethernet Module with PoE
HY931147C-RJ45
U1
Green LED
Yellow LED
RN2A 1K
RN2B 1K
J1/T+
J2/T-
J3/R+
J4
J5
J6/R-
J7
J8
1CT:1
C22
100nF
RN5A 49R9 1%
RN5B 49R9 1%
RN5C 49R9 1%
RN5D 49R9 1%
C23
100nF
C24
100nF
C25
100nF
C26
100nF
IC6
W5100SQFP80
RN7B 1K
SJ4
D2_INT
D2
C28
100nF
JP3
PoE supply feed to Arduino VIN ->
VIN
FT-POE-MODULE
For DC PoE feed, jumper "+ to VIN", "- to GND" directly
RN7D 1K
D10_SS
Q3
2N7002
D12_MISO
D11_MOSI
D10_SS
D13_SCK
SEN
SPI MISO tri-state by SS/nCS
SPI D10_SS/nCS low = SEN high = SPI enabled
Freetronics EtherTen (Arduino Compatible)
SKU: ETHERTEN
www.freetronics.com
V1.0 (2011-01-20)

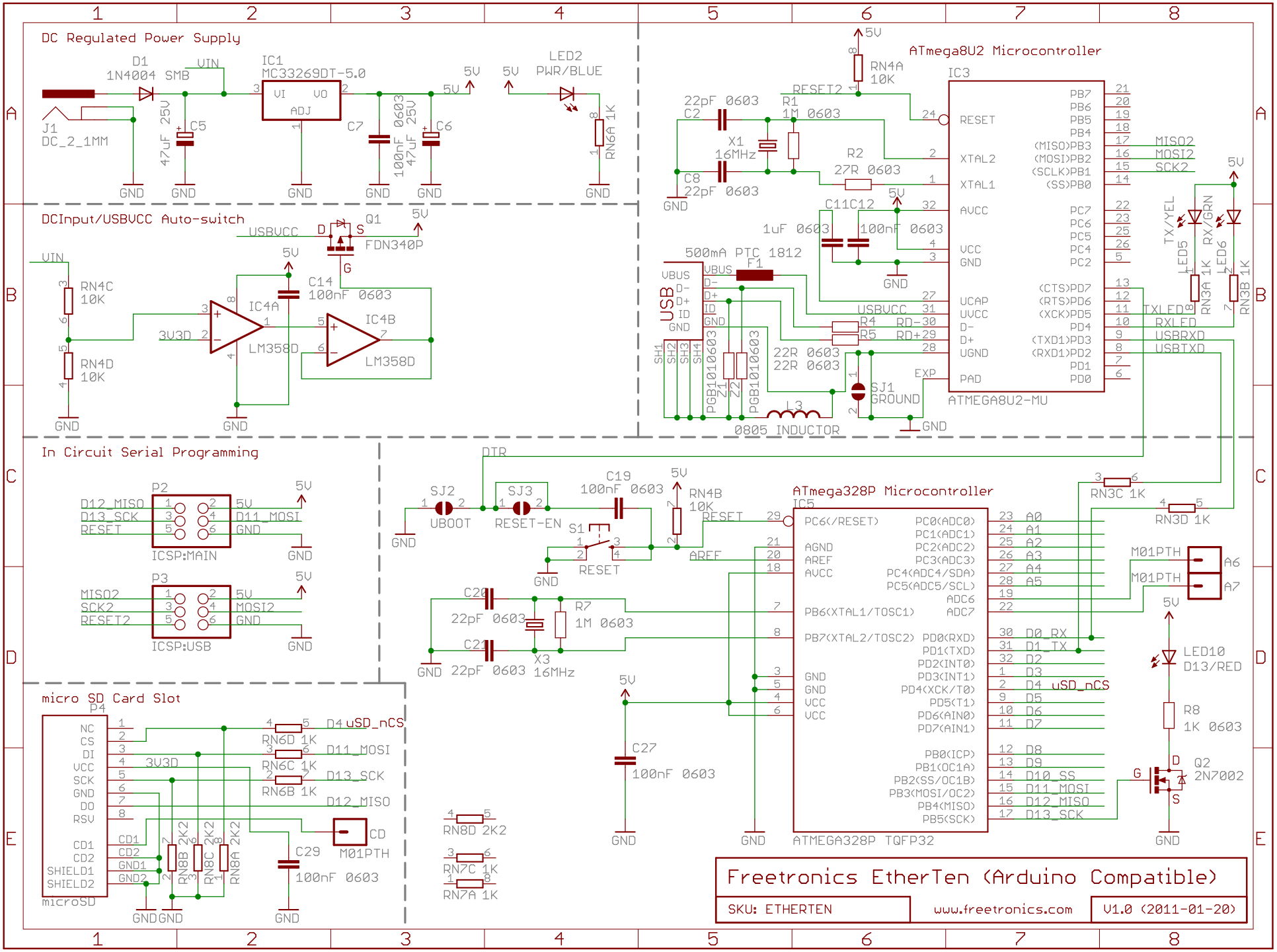
DC Regulated Power Supply
D1
1N4004 SMB
VIN
IC1
MC33269DT-5.0
VI VO
ADJ
J1
DC_2_1MM
C5
47uF 25V
C7
100nF 0603
C6
47uF 25V
5V
LED2
PWR/BLUE
RN6A 1K
GND
DCInput/USBVCC Auto-switch
USBVCC
Q1
FDN340P
D S G
VIN
RN4C
10K
RN4D
10K
3V3D
IC4A
IC4B
LM358D
C14
100nF 0603
ATmega8U2 Microcontroller
IC3
RN4A
10K
RESET2
R1
1M 0603
22pF 0603
C2
X1
16MHz
C8
22pF 0603
R2
27R 0603
C11C12
1uF 0603
100nF 0603
500mA PTC 1812
F1
USB
VBUS
D-
D+
ID
GND
SH1 SH2 SH3 SH4
PGB1010603
Z1 Z2
USBVCC
R4 RD-30
R5 RD+29
22R 0603
22R 0603
SJ1
GROUND
L3
0805 INDUCTOR
EXP
RESET
XTAL2
XTAL1
AVCC
VCC
GND
UCAP
UVCC
D-
D+
UGND
PAD
PB7
PB6
PB5
PB4
(MISO)PB3
(MOSI)PB2
(SCLK)PB1
(SS)PB0
PC7
PC6
PC5
PC4
PC2
(CTS)PD7
(RTS)PD6
(XCK)PD5
PD4
(TXD1)PD3
(RXD1)PD2
PD1
PD0
ATMEGA8U2-MU
MISO2
MOSI2
SCK2
TX/YEL
RX/GRN
LED5
LED6
RN3A 1K
RN3B 1K
TXLED
RXLED
USBRXD
USBTXD
In Circuit Serial Programming
P2
D12_MISO
D13_SCK
RESET
5V
D11_MOSI
GND
ICSP:MAIN
P3
MISO2
SCK2
RESET2
MOSI2
ICSP:USB
DTR
SJ2
UBOOT
SJ3
RESET-EN
C19
100nF 0603
RN4B
10K
S1
RESET
AREF
C20
22pF 0603
R7
1M 0603
C21
22pF 0603
X3
16MHz
ATmega328P Microcontroller
IC5
PC6(/RESET)
AGND
AREF
AVCC
PB6(XTAL1/TOSC1)
PB7(XTAL2/TOSC2)
GND
GND
VCC
VCC
PC0(ADC0)
PC1(ADC1)
PC2(ADC2)
PC3(ADC3)
PC4(ADC4/SDA)
PC5(ADC5/SCL)
ADC6
ADC7
PD0(RXD)
PD1(TXD)
PD2(INT0)
PD3(INT1)
PD4(XCK/T0)
PD5(T1)
PD6(AIN0)
PD7(AIN1)
PB0(ICP)
PB1(OC1A)
PB2(SS/OC1B)
PB3(MOSI/OC2)
PB4(MISO)
PB5(SCK)
A0
A1
A2
A3
A4
A5
D0_RX
D1_TX
D2
D3
D4 uSD_nCS
D5
D6
D7
D8
D9
D10_SS
D11_MOSI
D12_MISO
D13_SCK
ATMEGA328P TQFP32
RN3C 1K
RN3D 1K
M01PTH
A6
A7
LED10
D13/RED
R8
1K 0603
Q2
2N7002
C27
100nF 0603
micro SD Card Slot
P4
NC
CS
DI
VCC
SCK
GND
DO
RSV
CD1
CD2
GND1
GND2
SHIELD1
SHIELD2
microSD
3V3D
RN6D 1K
RN6C 1K
RN6B 1K
D4 uSD_nCS
D11_MOSI
D13_SCK
D12_MISO
CD
M01PTH
RN8B 2K2
RN8C 2K2
RN8A 2K2
C29
100nF 0603
RN8D 2K2
RN7C 1K
RN7A 1K
Freetronics EtherTen (Arduino Compatible)
SKU: ETHERTEN
www.freetronics.com
V1.0 (2011-01-20)

Prototyping Area

Draw your project schematic here